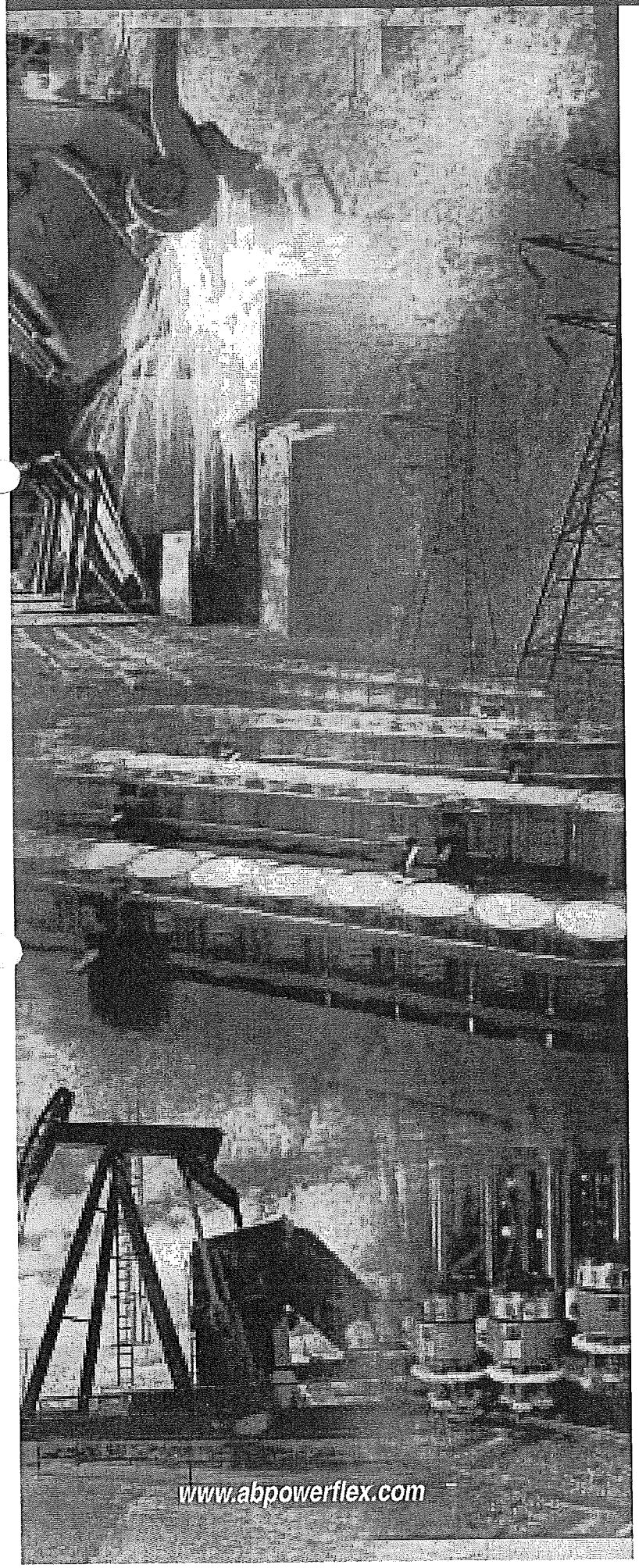

Allen-Bradley

PowerFlex™ 700

Adjustable Frequency AC Drive

Standard and Vector Control

User Manual

Rockwell Automation

Important User Information

Solid state equipment has operational characteristics differing from those of electromechanical equipment. "*Safety Guidelines for the Application, Installation and Maintenance of Solid State Controls*" (Publication SGI-1.1 available from your local Allen-Bradley Sales Office or online at **http://www.ab.com/manuals/gi**) describes some important differences between solid state equipment and hard-wired electromechanical devices. Because of this difference, and also because of the wide variety of uses for solid state equipment, all persons responsible for applying this equipment must satisfy themselves that each intended application of this equipment is acceptable.

In no event will the Allen-Bradley Company be responsible or liable for indirect or consequential damages resulting from the use or application of this equipment.

The examples and diagrams in this manual are included solely for illustrative purposes. Because of the many variables and requirements associated with any particular installation, the Allen-Bradley Company cannot assume responsibility or liability for actual use based on the examples and diagrams.

No patent liability is assumed by Allen-Bradley Company with respect to use of information, circuits, equipment, or software described in this manual.

Reproduction of the contents of this manual, in whole or in part, without written permission of the Allen-Bradley Company is prohibited.

Throughout this manual we use notes to make you aware of safety considerations.

ATTENTION: Identifies information about practices or circumstances that can lead to personal injury or death, property damage, or economic loss.

Attentions help you:

- identify a hazard
- avoid the hazard
- recognize the consequences

Important: Identifies information that is especially important for successful application and understanding of the product.

Shock Hazard labels may be located on or inside the drive to alert people that dangerous voltage may be present.

DriveExplorer, DriveExecutive, Force Technology and SCANport are trademarks of Rockwell Automation.
PLC is a registered trademark of Rockwell Automation.
ControlNet is a trademark of ControlNet International, Ltd.
DeviceNet is a trademark of the Open DeviceNet Vendor Association.

The information below summarizes the changes to the PowerFlex 700 User Manual, publication 20B-UM001B since the last release.

Parameter Updates

Parameter Name	Change	Parameter No.	Page
[Motor Type]	Important statement added.	040	3-12
[Torque Ref x Sel]	Option listing changed	427, 431	3-16
[Reset To Defalts]	Description clarified	197	3-35
[Voltage Class]	Description clarified	202	3-35

Manual Updates

Change	Page
References to "Flux Vector" have changed to "FVC Vector."	Throughout
Catalog Number Explanation updated.	Preface-4
"AC Input Phase Selection" has been updated.	1-8
"Selecting/Verifying Fan Voltage" has been updated.	1-8
Power Terminal Block info added for Frames 4 & 6.	1-9 to 1-12
"Disconnecting MOVs & Common Mode Capacitors" has been updated.	1-13
Torque for Encoder Terminal Block has been updated.	1-16
Drive Fuse & Circuit Breaker Ratings updated for Frames 4, 6 and 600V drives.	A-6
Dimensions added for Frames 4 & 6.	A-12 to A-14
Frame Cross Reference table updated.	A-18

Notes:

Table of Contents

Preface — **Overview**

Who Should Use this Manual? P-1
What Is Not in this Manual P-1
Reference Materials P-2
Manual Conventions P-2
Drive Frame Sizes P-3
General Precautions P-3
Catalog Number Explanation P-4

Chapter 1 — **Installation/Wiring**

Opening the Cover 1-1
Minimum Mounting Clearances 1-2
AC Supply Source Considerations 1-2
General Grounding Requirements 1-3
Fuses and Circuit Breakers 1-5
Power Wiring 1-5
Using Input/Output Contactors 1-12
Disconnecting MOVs & CM Capacitors 1-13
I/O Wiring 1-15
Reference Control 1-22
Auto/Manual Examples 1-23
EMC Instructions 1-24

Chapter 2 — **Start Up**

Prepare For Drive Start-Up 2-1
Status Indicators 2-2
Start-Up Routines 2-3
Running S.M.A.R.T. Start 2-4
Running an Assisted Start Up 2-4

Chapter 3 — **Programming and Parameters**

About Parameters 3-1
How Parameters are Organized 3-3
Monitor File 3-10
Motor Control File 3-12
Speed Command File 3-19
Dynamic Control File 3-27
Utility File 3-34
Communication File 3-43
Inputs & Outputs File 3-47
Parameter Cross Reference – by Name . . 3-52
Parameter Cross Reference – by Number 3-55

Chapter 4 — **Troubleshooting**

Faults and Alarms 4-1
Drive Status 4-2
Manually Clearing Faults 4-3
Fault Descriptions 4-4
Clearing Alarms 4-9
Alarm Descriptions 4-9
Common Symptoms/Corrective Actions 4-11
Testpoint Codes and Functions 4-13

Appendices — **See Next Page**

Appendix A **Supplemental Drive Information**
Specifications A-1
Communication Configurations A-3
Output Devices A-6
Drive, Fuse & Circuit Breaker Ratings . . . A-6
Dimensions A-11
Frame Cross Reference A-18

Appendix B **HIM Overview**
External and Internal Connections B-1
LCD Display Elements B-2
ALT Functions B-2
Menu Structure B-3
Viewing and Editing Parameters B-5
Linking Parameters (Vector Control Only) B-6
Removing/Installing the HIM B-8

Appendix C **Application Notes**
External Brake Resistor C-1
Minimum Speed C-1
Motor Control Technology C-2
Motor Overload C-4
Overspeed C-5
Power Loss Ride Through C-6
Process PI for Standard Control C-7
Reverse Speed Limit C-10
Skip Frequency C-11
Sleep Wake Mode C-13
Start At PowerUp C-14
Stop Mode C-15

Index

Overview

The purpose of this manual is to provide you with the basic information needed to install, start-up and troubleshoot the PowerFlex 700 Adjustable Frequency AC Drive.

For information on . . .	See page . . .
Who Should Use this Manual?	P-1
What Is Not in this Manual	P-1
Reference Materials	P-2
Manual Conventions	P-2
Drive Frame Sizes	P-3
General Precautions	P-3
Catalog Number Explanation	P-4

Who Should Use this Manual?

This manual is intended for qualified personnel. You must be able to program and operate Adjustable Frequency AC Drive devices. In addition, you must have an understanding of the parameter settings and functions.

What Is Not in this Manual

The *PowerFlex 700 User Manual* is designed to provide only basic start-up information. For detailed drive information, please refer to the *PowerFlex Reference Manual*. The reference manual is included on the CD supplied with your drive or is also available online at **http://www.ab.com/manuals.**

Reference Materials

The following manuals are recommended for general drive information:

Title	Publication	Available Online at . . .
Industrial Automation Wiring and Grounding Guidelines	1770-4.1	**www.ab.com/manuals/gi**
Preventive Maintenance of Industrial Control and Drive System Equipment	DRIVES-TD001A-EN-E	**www.ab.com/manuals/dr**
Safety Guidelines for the Application, Installation and Maintenance of Solid State Control	SGI-1.1	**www.ab.com/manuals/gi**
A Global Reference Guide for Reading Schematic Diagrams	0100-2.10	**www.ab.com/manuals/ms**
Guarding Against Electrostatic Damage	8000-4.5.2	**www.ab.com/manuals/dr**

For detailed PowerFlex 700 information:

Title	Publication	Available . . .
PowerFlex Reference Manual	PFLEX-RM001B-EN-E	on the CD supplied with the drive or at **www.ab.com/manuals/dr**

Manual Conventions

- In this manual we refer to the PowerFlex 700 Adjustable Frequency AC Drive as; drive, PowerFlex 700 or PowerFlex 700 Drive.
- To help differentiate parameter names and LCD display text from other text, the following conventions will be used:
  - Parameter Names will appear in [brackets].
    For example: [DC Bus Voltage].
  - Display Text will appear in "quotes." For example: "Enabled."
- The following words are used throughout the manual to describe an action:

Word	Meaning
Can	Possible, able to do something
Cannot	Not possible, not able to do something
May	Permitted, allowed
Must	Unavoidable, you must do this
Shall	Required and necessary
Should	Recommended
Should Not	Not recommended

Drive Frame Sizes

Similar PowerFlex 700 drive sizes are grouped into frame sizes to simplify spare parts ordering, dimensioning, etc. A cross reference of drive catalog numbers and their respective frame size is provided in Appendix A.

General Precautions

ATTENTION: This drive contains ESD (Electrostatic Discharge) sensitive parts and assemblies. Static control precautions are required when installing, testing, servicing or repairing this assembly. Component damage may result if ESD control procedures are not followed. If you are not familiar with static control procedures, reference A-B publication 8000-4.5.2, "Guarding Against Electrostatic Damage" or any other applicable ESD protection handbook.

ATTENTION: An incorrectly applied or installed drive can result in component damage or a reduction in product life. Wiring or application errors, such as, undersizing the motor, incorrect or inadequate AC supply, or excessive ambient temperatures may result in malfunction of the system.

ATTENTION: Only qualified personnel familiar with adjustable frequency AC drives and associated machinery should plan or implement the installation, start-up and subsequent maintenance of the system. Failure to comply may result in personal injury and/or equipment damage.

ATTENTION: To avoid an electric shock hazard, verify that the voltage on the bus capacitors has discharged before performing any work on the drive. Measure the DC bus voltage at the +DC & –DC terminals of the Power Terminal Block (refer to Chapter 1 for location). The voltage must be zero.

ATTENTION: Risk of injury or equipment damage exists. DPI or SCANport host products must not be directly connected together via 1202 cables. Unpredictable behavior can result if two or more devices are connected in this manner.

ATTENTION: The "adjust freq" portion of the bus regulator function is extremely useful for preventing nuisance overvoltage faults resulting from aggressive decelerations, overhauling loads, and eccentric loads. It forces the output frequency to be greater than commanded frequency while the drive's bus voltage is increasing towards levels that would otherwise cause a fault. However, it can also cause either of the following two conditions to occur.

1. Fast positive changes in input voltage (more than a 10% increase within 6 minutes) can cause uncommanded positive speed changes. However an "OverSpeed Limit" fault will occur if the speed reaches [Max Speed] + [Overspeed Limit]. If this condition is unacceptable, action should be taken to 1) limit supply voltages within the specification of the drive and, 2) limit fast positive input voltage changes to less than 10%. Without taking such actions, if this operation is unacceptable, the "adjust freq" portion of the bus regulator function must be disabled (see parameters 161 and 162).
2. Actual deceleration times can be longer than commanded deceleration times. However, a "Decel Inhibit" fault is generated if the drive stops decelerating altogether. If this condition is unacceptable, the "adjust freq" portion of the bus regulator must be disabled (see parameters 161 and 162). In addition, installing a properly sized dynamic brake resistor will provide equal or better performance in most cases.

Important: These faults are not instantaneous. Test results have shown that they can take between 2-12 seconds to occur.

Catalog Number Explanation

The PowerFlex 700 catalog numbering scheme is shown on page P-5.

Catalog Number Explanation

20B	D	2P1	A	3	A	Y	N	A	R	A	0
Drive	Voltage Rating	Rating	Enclosure	HIM	Documentation	Brake	Brake Resistor	Emission	Comm Slot	I/O	Feedback

Code	Type
20B	700

Code	Voltage	Ph.
B	240V AC	3
C	400V AC	3
D	480V AC	3
E	600V AC[3]	3
F	690V AC	3

Output Current @ 480V 60Hz Input

Code	Amps	HP
1P1	1.1	0.5
2P1	2.1	1.0
3P4	3.4	2.0
5P0	5	3.0
8P0	8	5.0
011	11	7.5
014	14	10
022	22	15
027	27	20
034	34	25
040	40	30
052	52	40
065	65	50
077	77	60
096	96	75
125	125	100
156	156	125
180	180	150

Code	Enclosure
A	IP 20, NEMA Type 1
N	Open

Code	Operator Interface
0	Blank Cover
2	Digital LCD
3	Full Numeric LCD
4	Analog LCD
5	Prog. Only LCD

Code	Type
A	User Manual
N	No Manual

Code	w/Brake IGBT[2]
Y	Yes
N	No

Code	w/Resistor
Y	Yes[1]
N	No

Code	CE Filter	CM Choke
A	Yes	Yes
B	Yes	No

Code	Version
C	ControlNet (Coax)
D	DeviceNet
E	EtherNet/IP
R	RIO
S	RS-485
N	None

Code	I/O	I/O Volts
A	Std.	24V DC/AC
B	Std.	115V AC
C	Vector	24V DC/AC
D	Vector	115V AC
N	None	–

Code	Type
0	None
1	Encoder, 12V

(1) Not available for Frame 3 drives or larger.
(2) Brake IGBT is standard on Frames 0-3 and optional on Frames 4-6.
(3) Note: CE Certification testing has not been performed on 600V class drives.

Notes:

Installation/Wiring

This chapter provides information on mounting and wiring the PowerFlex 700 Drive.

For information on . .	See page
Opening the Cover	1-1
Minimum Mounting Clearances	1-2
AC Supply Source Considerations	1-2
General Grounding Requirements	1-3
Fuses and Circuit Breakers	1-5
Power Wiring	1-5

For information on. .	See page
Disconnecting MOVs and Common Mode Capacitors	1-13
I/O Wiring	1-15
Reference Control	1-22
Auto/Manual Examples	1-23
EMC Instructions	1-24

Most start-up difficulties are the result of incorrect wiring. Every precaution must be taken to assure that the wiring is done as instructed. All items must be read and understood before the actual installation begins.

ATTENTION: The following information is merely a guide for proper installation. The Allen-Bradley Company cannot assume responsibility for the compliance or the noncompliance to any code, national, local or otherwise for the proper installation of this drive or associated equipment. A hazard of personal injury and/or equipment damage exists if codes are ignored during installation.

Opening the Cover

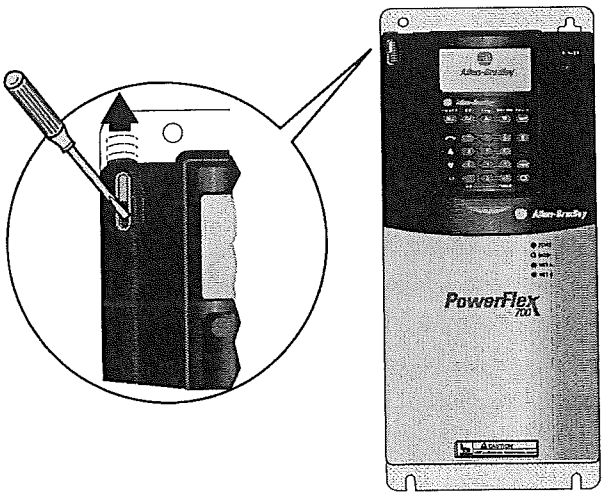

Locate the slot in the upper left corner of the drive. Slide the locking tab up and swing the cover open.

Special hinges allow cover to move away from drive and lay on top of adjacent drive (if present).

Minimum Mounting Clearances

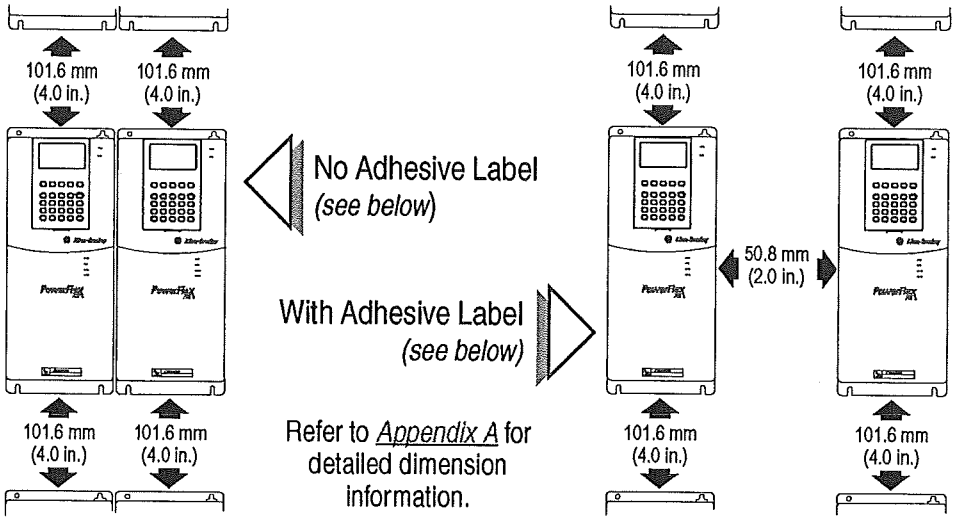

Operating Temperatures

PowerFlex 700 drives are designed to operate at 0° to 40° C ambient. To operate the drive in installations between 41° and 50° C, refer to the table below.

Table 1.A Acceptable Surrounding Air Temperature & Required Actions

	Required Action . . .		
	IP 20, NEMA Type 1	IP 20, NEMA Type Open	IP 00, NEMA Type Open
Drive Catalog Number	*No Action Required*	*Remove Top Label*	*Remove Top Label & Vent Plate*(1)
All *Except* 20BC072	40° C	50° C	NA
20BC072	40° C	45° C	50° C

(1) To remove vent plate (see page A-16 for location), lift top edge of plate from the chassis. Rotate the plate out from the back plate.

Important: Removing the adhesive label from the drive changes the NEMA enclosure rating from Type 1 to Open type.

AC Supply Source Considerations

PowerFlex 700 drives are suitable for use on a circuit capable of delivering up to a maximum of 200,000 rms symmetrical amperes, and a maximum of 600 volts.

ATTENTION: To guard against personal injury and/or equipment damage caused by improper fusing or circuit breaker selection, use only the recommended line fuses/circuit breakers specified in Appendix A.

If a system ground fault monitor (RCD) is to be used, only Type B (adjustable) devices should be used to avoid nuisance tripping.

Unbalanced or Ungrounded Distribution Systems

If phase to ground voltage will exceed 125% of normal line to line voltage or the supply system is ungrounded, refer to the *PowerFlex Reference Manual.*

ATTENTION: PowerFlex 700 drives contain protective MOVs and common mode capacitors that are referenced to ground. These devices should be disconnected if the drive is installed on an ungrounded distribution system. See page 1-13 for jumper locations.

Input Power Conditioning

Certain events on the power system supplying a drive can cause component damage or shortened product life. These conditions are divided into 2 basic categories:

1. **All drives**
   - The power system has power factor correction capacitors switched in and out of the system, either by the user or by the power company.
   - The power source has intermittent voltage spikes in excess of 6000 volts. These spikes could be caused by other equipment on the line or by events such as lightning strikes.
   - The power source has frequent interruptions.
2. **5 HP or Less Drives (in addition to "1" above)**
   - The nearest supply transformer is larger than 100kVA or the available short circuit (fault) current is greater than 100,000A.
   - The impedance in front of the drive is less than 0.5%.

If any or all of these conditions exist, it is recommended that the user install a minimum amount of impedance between the drive and the source. This impedance could come from the supply transformer itself, the cable between the transformer and drive or an additional transformer or reactor. The impedance can be calculated using the information supplied in either the *PowerFlex Reference Manual* or the technical document on *Wiring and Grounding Guidelines*, publication DRIVES-IN001A-EN-P.

General Grounding Requirements

The drive Safety Ground - PE must be connected to system ground. Ground impedance must conform to the requirements of national and local industrial safety regulations and/or electrical codes. The integrity of all ground connections should be periodically checked.

For installations within a cabinet, a single safety ground point or ground bus bar connected directly to building steel should be used. All circuits including the AC input ground conductor should be grounded independently and directly to this point/bar.

Figure 1.1 Typical Grounding

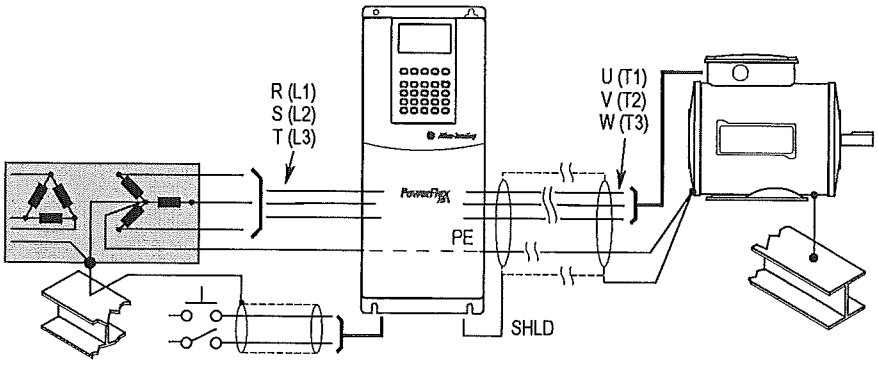

Safety Ground - PE

This is the safety ground for the drive that is required by code. This point must be connected to adjacent building steel (girder, joist), a floor ground rod or bus bar (see above). Grounding points must comply with national and local industrial safety regulations and/or electrical codes.

Shield Termination - SHLD

The Shield terminal (see Figure 1.3 on page 1-10) provides a grounding point for the motor cable shield. It must be connected to an earth ground by a separate continuous lead. The **motor cable** shield should be connected to this terminal on the drive (drive end) and the motor frame (motor end). A shield terminating cable gland may also be used.

When shielded cable is used for **control and signal wiring**, the shield should be grounded at the source end only, not at the drive end.

RFI Filter Grounding

Using an optional RFI filter may result in relatively high ground leakage currents. Therefore, the **filter must only be used in installations with grounded AC supply systems and be permanently installed and solidly grounded** (bonded) to the building power distribution ground. Ensure that the incoming supply neutral is solidly connected (bonded) to the same building power distribution ground. Grounding must not rely on flexible cables and should not include any form of plug or socket that would permit inadvertent disconnection. Some local codes may require redundant ground connections. The integrity of all connections should be periodically checked. Refer to the instructions supplied with the filter.

Fuses and Circuit Breakers

The PowerFlex 700 can be installed with either input fuses or an input circuit breaker. National and local industrial safety regulations and/or electrical codes may determine additional requirements for these installations. Refer to Appendix A for recommended fuses/circuit breakers.

ATTENTION: The PowerFlex 700 does not provide branch short circuit protection. Specifications for the recommended fuse or circuit breaker to provide protection against short circuits are provided in Appendix A.

Power Wiring

ATTENTION: National Codes and standards (NEC, VDE, BSI etc.) and local codes outline provisions for safely installing electrical equipment. Installation must comply with specifications regarding wire types, conductor sizes, branch circuit protection and disconnect devices. Failure to do so may result in personal injury and/or equipment damage.

Cable Types Acceptable for 200-600 Volt Installations

A variety of cable types are acceptable for drive installations. For many installations, unshielded cable is adequate, provided it can be separated from sensitive circuits. As an approximate guide, allow a spacing of 0.3 meters (1 foot) for every 10 meters (32.8 feet) of length. In all cases, long parallel runs must be avoided. Do not use cable with an insulation thickness less than or equal to 15 mils (0.4mm/0.015 in.). See Table 1.B.

Unshielded

THHN, THWN or similar wire is acceptable for drive installation in dry environments provided adequate free air space and/or conduit fill rates limits are provided. **Do not use THHN or similarly coated wire in wet areas**. Any wire chosen must have a minimum insulation thickness of 15 Mils and should not have large variations in insulation concentricity.

Shielded/Armored Cable

Shielded cable contains all of the general benefits of multi-conductor cable with the added benefit of a copper braided shield that can contain much of the noise generated by a typical AC Drive. Strong consideration for shielded cable should be given in installations with sensitive equipment such as weigh scales, capacitive proximity switches and other devices that may be affected by electrical noise in the distribution system. Applications with large numbers of drives in a similar location, imposed EMC regulations or a high degree of communications/ networking are also good candidates for shielded cable.

Shielded cable may also help reduce shaft voltage and induced bearing currents for some applications. In addition, the increased impedance of shielded cable may help extend the distance that the motor can be located from the drive without the addition of motor protective devices such as terminator networks. Refer to *Reflected Wave* in "Wiring and Grounding Guidelines for PWM AC Drives," publication DRIVES-IN001A-EN-P.

Consideration should be given to all of the general specifications dictated by the environment of the installation, including temperature, flexibility, moisture characteristics and chemical resistance. In addition, a braided shield should be included and be specified by the cable manufacturer as having coverage of at least 75%. An additional foil shield can greatly improve noise containment.

A good example of recommended cable is Belden® 295xx (xx determines gauge). This cable has four (4) XLPE insulated conductors with a 100% coverage foil and an 85% coverage copper braided shield (with drain wire) surrounded by a PVC jacket.

Other types of shielded cable are available, but the selection of these types may limit the allowable cable length. Particularly, some of the newer cables twist 4 conductors of THHN wire and wrap them tightly with a foil shield. This construction can greatly increase the cable charging current required and reduce the overall drive performance. Unless specified in the individual distance tables as tested with the drive, these cables are not recommended and their performance against the lead length limits supplied is not known.

See Table 1.B.

Table 1.B Recommended Shielded Wire

Location	Rating/Type	Description
Standard (Option 1)	600V, 90°C (194°F) XHHW2/RHW-2 Anixter B209500-B209507, Belden 29501-29507, or equivalent	• Four tinned copper conductors with XLPE insulation. • Copper braid/aluminum foil combination shield and tinned copper drain wire. • PVC jacket.
Standard (Option 2)	Tray rated 600V, 90° C (194° F) RHH/RHW-2 Anixter OLF-7xxxxx or equivalent	• Three tinned copper conductors with XLPE insulation. • 5 mil single helical copper tape (25% overlap min.) with three bare copper grounds in contact with shield. • PVC jacket.
Class I & II; Division I & II	Tray rated 600V, 90° C (194° F) RHH/RHW-2 Anixter 7V-7xxxx-3G or equivalent	• Three bare copper conductors with XLPE insulation and impervious corrugated continuously welded aluminum armor. • Black sunlight resistant PVC jacket overall. • Three copper grounds on #10 AWG and smaller.

EMC Compliance

Refer to EMC Instructions on page 1-24 for details.

Cable Trays and Conduit

If cable trays or large conduits are to be used, refer to guidelines presented in the *PowerFlex Reference Manual*.

ATTENTION: To avoid a possible shock hazard caused by induced voltages, unused wires in the conduit must be grounded at both ends. For the same reason, if a drive sharing a conduit is being serviced or installed, all drives using this conduit should be disabled. This will help minimize the possible shock hazard from "cross coupled" motor leads.

Motor Cable Lengths

Typically, motor lead lengths less than 91 meters (300 feet) are acceptable. However, if your application dictates longer lengths, refer to the *PowerFlex Reference Manual* for details.

Cable Entry Plate Removal

If additional wiring access is needed, the Cable Entry Plate on 0-3 Frame drives can be removed. Simply loosen the screws securing the plate to the chassis. The slotted mounting holes assure easy removal.

Important: Removing the Cable Entry Plate limits the maximum ambient temperature to 40 degrees C (104 degrees F).

Access Panel Removal

Frame 3 drives utilize a panel/cover over the power wiring terminals. To remove, simply slide it down and out. Replace when wiring is complete.

AC Input Phase Selection (Frames 5 & 6 Only)

ATTENTION: To avoid a shock hazard, ensure that all power to the drive has been removed before performing the following.

Moving the "Line Type" jumper shown in Figure 1.2 will allow single or three-phase operation.

Important: When selecting single-phase operation, input power must be applied to the R (L1) and S (L2) terminals only.

Selecting/Verifying Fan Voltage (Frames 5 & 6 Only)

ATTENTION: To avoid a shock hazard, ensure that all power to the drive has been removed before performing the following.

Frames 5 & 6 utilize a transformer to match the input line voltage to the internal fan voltage. If your line voltage is different than the voltage class specified on the drive nameplate, it may be necessary to change transformer taps as shown below (Frame 5) and on page 1-8 (Frame 6).

Figure 1.2 Typical Locations - Phase Select Jumper & Transformer (Frame 5 shown)

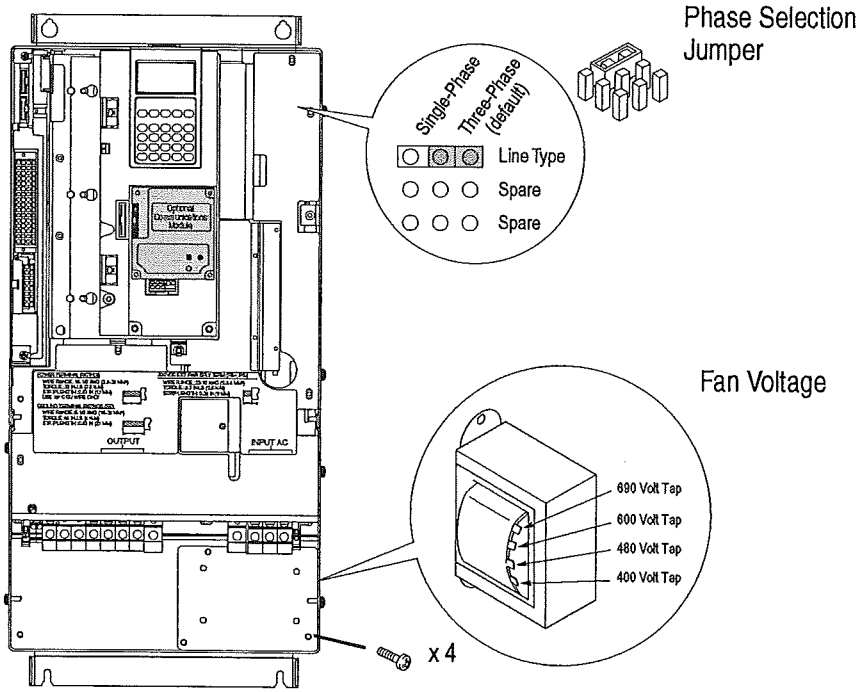

Frame 6 Transformer Tap Access

The transformer is located behind the Power Terminal Block in the area shown in Figure 1.2. Access is gained by releasing the terminal block from the rail. To release terminal block and change tap:

1. Locate the small metal tab at the bottom of the end block.
2. Press the tab in and pull the top of the block out. Repeat for next block if desired.
3. Select appropriate transformer tap.
4. Replace block(s) in reverse order.

Power Terminal Block

Figure 1.3 shows the typical location of the Power Terminal Block.

Table 1.C Power Terminal Block Specifications

No.	Name	Frame	Description	Wire Size Range(1) Maximum	Wire Size Range(1) Minimum	Torque Maximum	Torque Recommended
❶	Power Terminal Block	0 & 1	Input power and motor connections	4.0 mm² (10 AWG)	0.5 mm² (22 AWG)	1.7 N-m (15 lb.-in.)	0.8 N-m (7 lb.-in.)
		2	Input power and motor connections	10.0 mm² (6 AWG)	0.8 mm² (18 AWG)	1.7 N-m (15 lb.-in.)	1.4 N-m (12 lb.-in.)
		3	Input power and motor connections	25.0 mm² (3 AWG)	2.5 mm² (14 AWG)	3.6 N-m (32 lb.-in.)	1.8 N-m (16 lb.-in.)
			BR1, 2 terminals	10.0 mm² (6 AWG)	0.8 mm² (18 AWG)	1.7 N-m (15 lb.-in.)	1.4 N-m (12 lb.-in.)
		4	Input power and motor connections	35.0 mm² (1/0 AWG)	10 mm² (8 AWG)	4.0 N-m (35 lb.-in.)	4.0 N-m (35 lb.-in.)
		5 (75 HP)	Input power, BR1, 2, DC+, DC– and motor connections	35.0 mm² (1/0 AWG)	2.5 mm² (14 AWG)	3.6 N-m (32 lb.-in.)	3.6 N-m (32 lb.-in.)
			PE	35.0 mm² (1/0 AWG)	16.0 mm² (6 AWG)	5 N-m (44 lb.-in.)	5 N-m (44 lb.-in.)
		5 (100 HP)	Input power, DC+, DC– and motor connections	70.0 mm² (3/0 AWG)	16.0 mm² (4 AWG)	15 N-m (133 lb.-in.)	15 N-m (133 lb.-in.)
			BR1, 2, terminals	35.0 mm² (1/0 AWG)	2.5 mm² (14 AWG)	3.6 N-m (32 lb.-in.)	3.6 N-m (32 lb.-in.)
			PE	35.0 mm² (1/0 AWG)	16.0 mm² (6 AWG)	5 N-m (44 lb.-in.)	5 N-m (44 lb.-in.)
		6	Input power, DC+, DC–, BR1, 2, PE, motor connections	70.0 mm² (250 MCM)	2.5 mm² (14 AWG)	6 N-m (52 lb.-in.)	6 N-m (52 lb.-in.)
❷	SHLD Terminal	0-6	Terminating point for wiring shields	—	—	1.6 N-m (14 lb.-in.)	1.6 N-m (14 lb.-in.)
❸	AUX Terminal Block	0-4	Auxiliary Control Voltage(2)	1.3 mm² (16 AWG)	0.2 mm² (24 AWG)	—	—
		5-6		4.0 mm² (10 AWG)	0.5 mm² (22 AWG)	0.6 N-m (5.3 lb.-in.)	0.6 N-m (5.3 lb.-in.)

(1) Maximum/minimum sizes that the terminal block will accept - these are not recommendations.

(2) External control power:
UL Installation - 300V DC, ±10%, Non UL Installation - 270-600V DC, ±10%.
0-3 Frame - 40 W, 165 mA, 5 Frame - 80 W, 90 mA

Figure 1.3 Typical Power Terminal Block Location

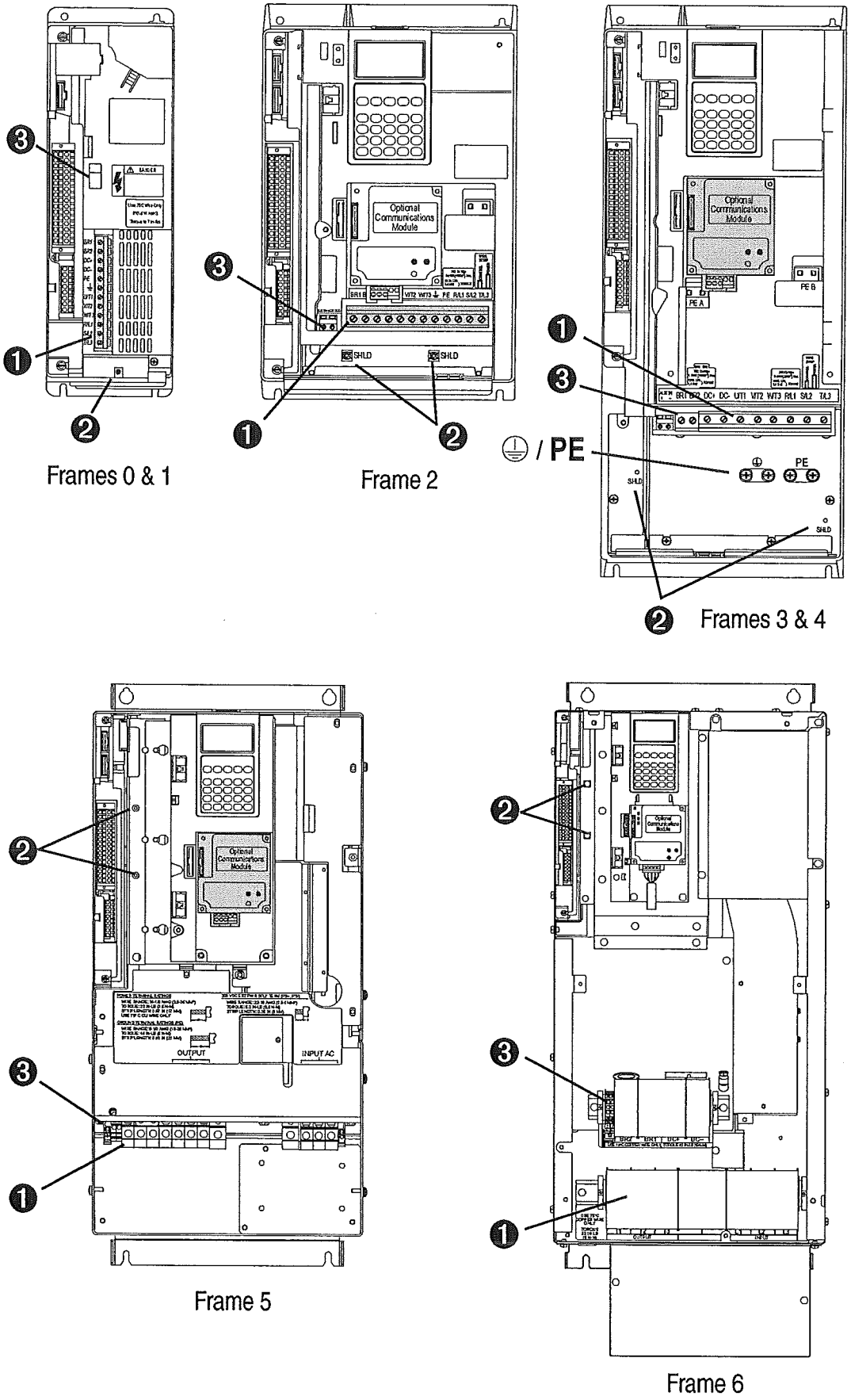

Figure 1.4 Power Terminal Block

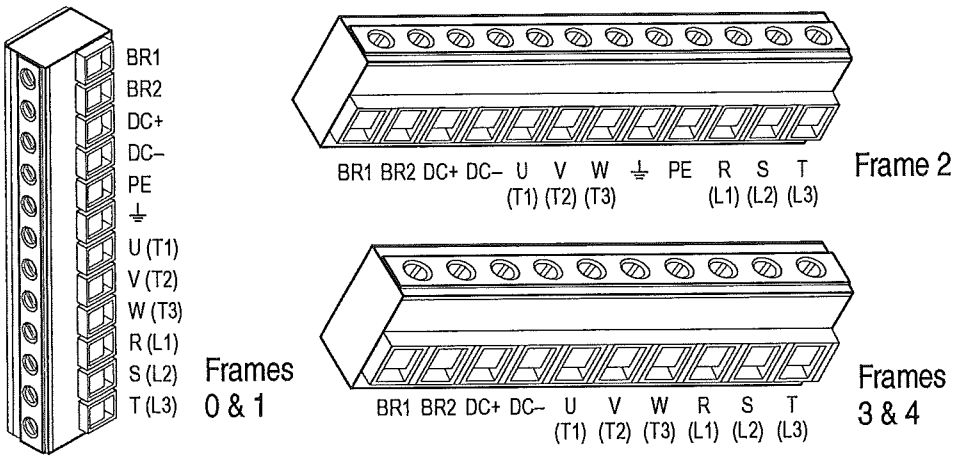

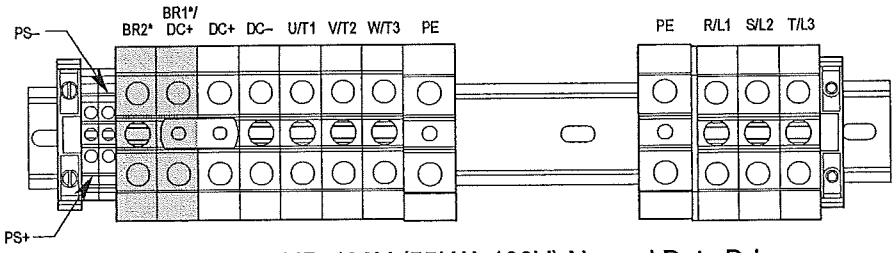

Frame 5 – 75 HP, 480V (55kW, 400V) Normal Duty Drive

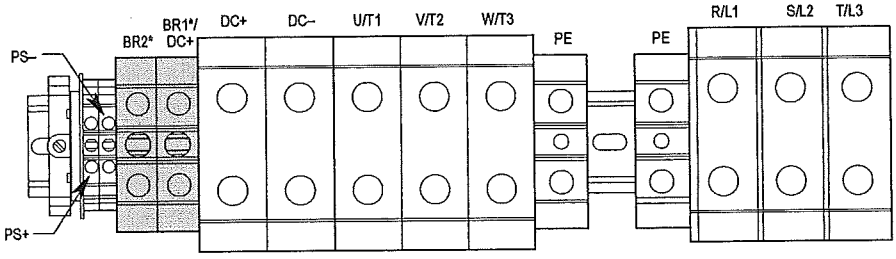

Frame 5 – 100 HP, 480V Normal Duty Drive

Frame 6

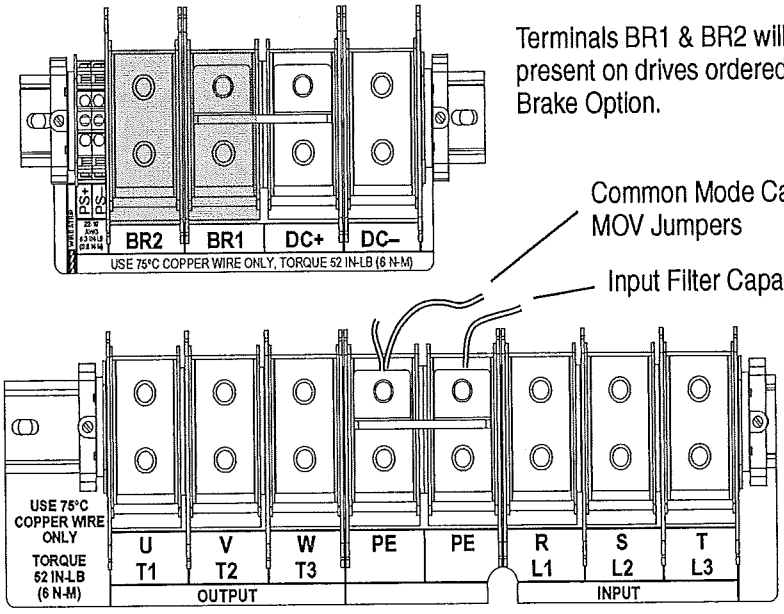

Terminal	Description	Notes
BR1	DC Brake (+)	Dynamic Brake Resistor Connection (+)
BR2	DC Brake (–)	Dynamic Brake Resistor Connection (–)
DC+	DC Bus (+)	
DC–	DC Bus (–)	
PE	PE Ground	Refer to Figure 1.3 for location on 3 Frame drives
⏚	Motor Ground	Refer to Figure 1.3 for location on 3 Frame drives
U	U (T1)	To motor
V	V (T2)	To motor
W	W (T3)	To motor
R	R (L1)	AC Line Input Power
S	S (L2)	Three-Phase = R, S & T
T	T (L3)	Single-Phase = R & S Only
PS+	AUX (+)	Auxiliary Control Voltage (see Table 1.C)
PS–	AUX (–)	Auxiliary Control Voltage (see Table 1.C)

Using Input/Output Contactors

Input Contactor Precautions

ATTENTION: A contactor or other device that routinely disconnects and reapplies the AC line to the drive to start and stop the motor can cause drive hardware damage. The drive is designed to use control input signals that will start and stop the motor. If an input device is used, operation must not exceed one cycle per minute or drive damage will occur.

ATTENTION: The drive start/stop/enable control circuitry includes solid state components. If hazards due to accidental contact with moving machinery or unintentional flow of liquid, gas or solids exist, an additional hardwired stop circuit may be required to remove the AC line to the drive. An auxiliary braking method may be required.

Output Contactor Precaution

ATTENTION: To guard against drive damage when using output contactors, the following information must be read and understood. One or more output contactors may be installed between the drive and motor(s) for the purpose of disconnecting or isolating certain motors/loads. If a contactor is opened while the drive is operating, power will be removed from the respective motor, but the drive will continue to produce voltage at the output terminals. In addition, reconnecting a motor to an active drive (by closing the contactor) could produce excessive current that may cause the drive to fault. If any of these conditions are determined to be undesirable or unsafe, an auxiliary contact on the output contactor should be wired to a drive digital input that is programmed as "Enable." This will cause the drive to execute a coast-to-stop (cease output) whenever an output contactor is opened.

Disconnecting MOVs and Common Mode Capacitors

PowerFlex 700 drives contain protective MOVs and common mode capacitors that are referenced to ground. To guard against drive damage, these devices should be disconnected if the drive is installed on an ungrounded distribution system where the line-to-ground voltages on any phase could exceed 125% of the nominal line-to-line voltage. To disconnect these devices, remove the jumper(s) listed in Table 1.D. Jumpers can be removed by carefully pulling the jumper straight out. See the *PowerFlex Reference Manual* for more information on ungrounded system installation.

ATTENTION: To avoid an electric shock hazard, verify that the voltage on the bus capacitors has discharged before removing/installing jumpers. Measure the DC bus voltage at the +DC & –DC terminals of the Power Terminal Block. The voltage must be zero.

Table 1.D Jumper Removal

Frames	Jumper	Component	Jumper Location	No.
0, 1	PEA	Common Mode Capacitors	Remove the I/O Cassette as described on page 1-16. Jumpers are located on the drive Power Board (see Figure 1.5).	❶
	PEB	MOV's		❷
2-4	PEA	Common Mode Capacitors	Jumpers are located above the Power Terminal Block (see Figure 1.5).	❸
	PEB	MOV's		❹
5	Wire	Common Mode Capacitors	Remove the I/O Cassette as described on page 1-16. The green/yellow jumper is located on the back of chassis (see Figure 1.5 for location). Disconnect, insulate and secure the wire to guard against unintentional contact with chassis or components.	❺
		MOV's Input Filter Capacitors	Note location of the two green/yellow jumper wires next to the Power Terminal Block (Figure 1.5). Disconnect, insulate and secure the wires to guard against unintentional contact with chassis or components.	❻
6	Wire	Common Mode Capacitors MOV's Input Filter Capacitors	Remove the wire guard from the Power Terminal Block. Disconnect the three green/yellow wires from the two "PE" terminals shown in Figure 1.4. Insulate and secure the wires to guard against unintentional contact with chassis or components.	

Figure 1.5 Typical Jumper Locations (see Table 1.D for description)

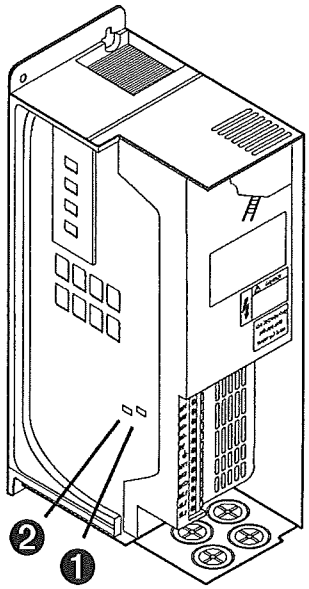

Frames 0 & 1
(I/O Cassette Removed)

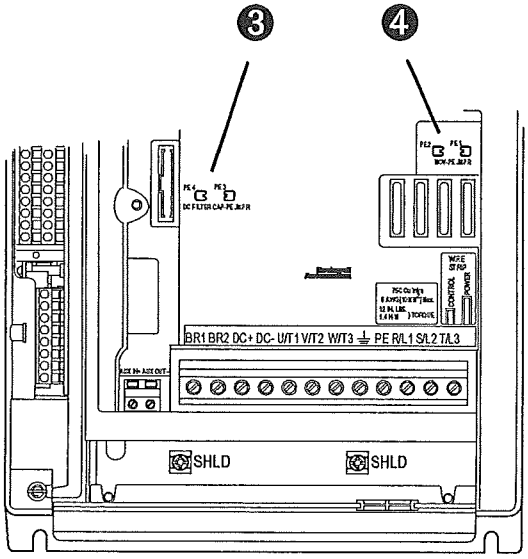

Frame 2

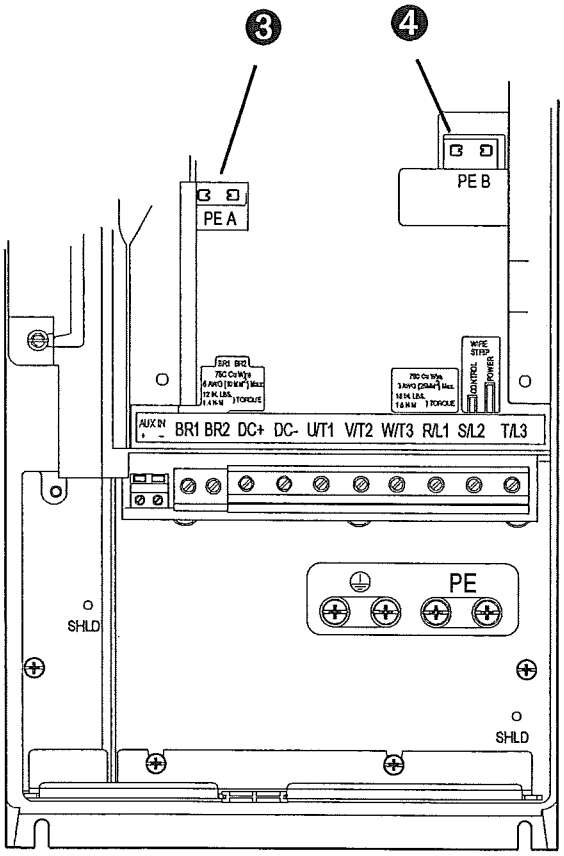

Frames 3 & 4

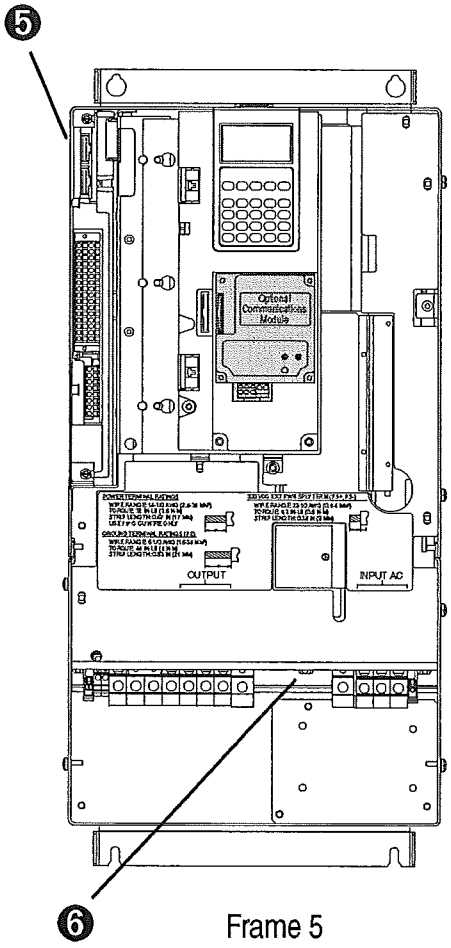

Frame 5

I/O Wiring

Important points to remember about I/O wiring:

- Always use copper wire.
- Wire with an insulation rating of 600V or greater is recommended.
- Control and signal wires should be separated from power wires by at least 0.3 meters (1 foot).

Important: I/O terminals labeled "(–)" or "Common" are not referenced to earth ground and are designed to greatly reduce common mode interference. Grounding these terminals can cause signal noise.

ATTENTION: Configuring an analog input for 0-20mA operation and driving it from a voltage source could cause component damage. Verify proper configuration prior to applying input signals.

ATTENTION: Hazard of personal injury or equipment damage exists when using bipolar input sources. Noise and drift in sensitive input circuits can cause unpredictable changes in motor speed and direction. Use speed command parameters to help reduce input source sensitivity.

Signal and Control Wire Types

Table 1.E Recommended Signal Wire

Signal Type	Wire Type(s)	Description	Minimum Insulation Rating
Analog I/O	Belden 8760/9460 (or equiv.)	0.750 mm^2 (18AWG), twisted pair, 100% shield with drain[1].	300V, 60 degrees C (140 degrees F)
	Belden 8770 (or equiv.)	0.750 mm^2 (18AWG), 3 cond., shielded for remote pot only.	
Encoder/ Pulse I/O	Less than or equal to 30 m (98 ft.) – Belden 9728 (or equiv.)	0.196 mm^2 (24AWG), individually shielded.	
	Greater than 30 m (98 ft.) – Belden 9773 (or equiv.)	0.750 mm^2 (18AWG), twisted pair, shielded.	
EMC Compliance	Refer to EMC Instructions on page 1-24 for details.		

(1) If the wires are short and contained within a cabinet which has no sensitive circuits, the use of shielded wire may not be necessary, but is always recommended.

Table 1.F Recommended Control Wire for Digital I/O

Type	Wire Type(s)	Description	Minimum Insulation Rating
Unshielded	Per US NEC or applicable national or local code	–	300V, 60 degrees C (140 degrees F)
Shielded	Multi-conductor shielded cable such as Belden 8770 (or equiv.)	0.750 mm^2 (18AWG), 3 conductor, shielded.	

The I/O Control Cassette

Figure 1.6 shows the I/O Control Cassette and terminal block locations. The cassette provides a mounting point for the various PowerFlex 700 I/O options. To remove the cassette, follow the steps below. Cassette removal will be similar for all frames (0 Frame drive shown).

Step	Description
Ⓐ	Disconnect the two cable connectors shown in Figure 1.6.
Ⓑ	Loosen the two screw latches shown in Figure 1.6.
Ⓒ	Slide the cassette out.
Ⓓ	Remove screws securing cassette cover to gain access to the boards.

Figure 1.6 PowerFlex 700 Typical Cassette & I/O Terminal Blocks

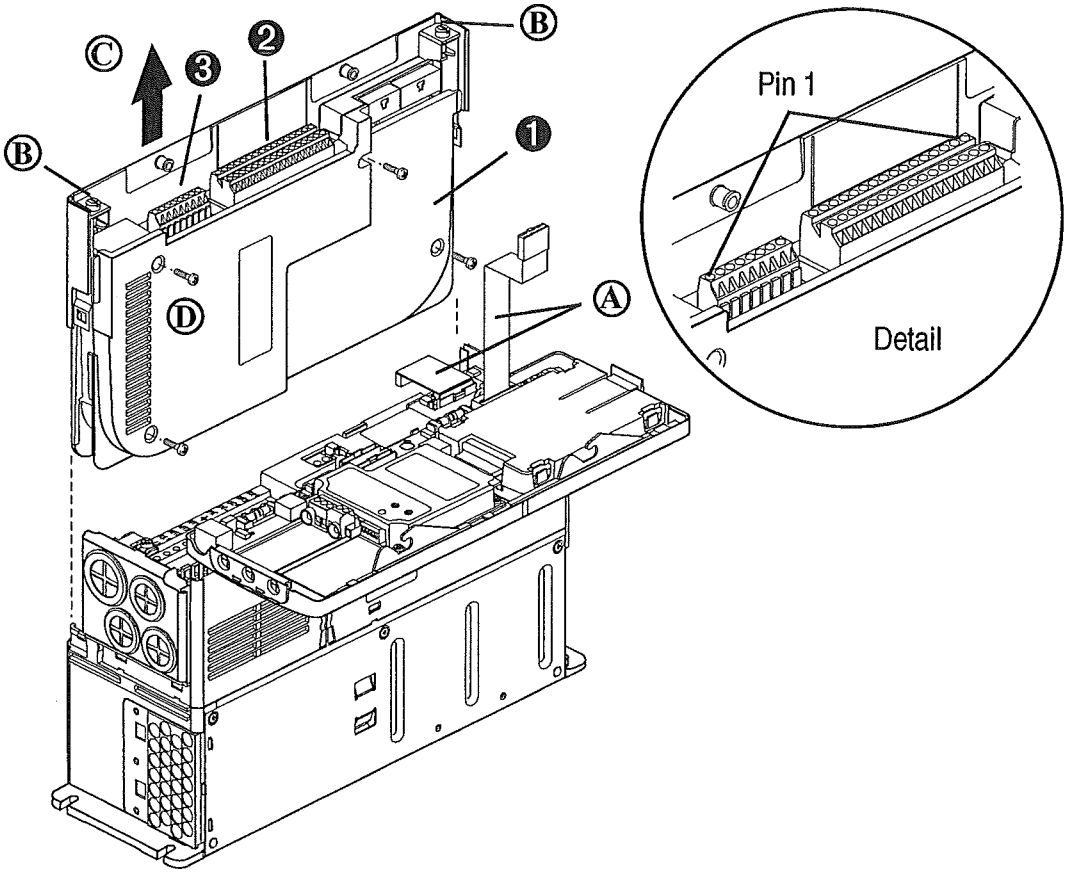

I/O Terminal Blocks

Table 1.G I/O Terminal Block Specifications

No.	Name	Description	Wire Size Range(2)		Torque	
			Maximum	Minimum	Maximum	Recommended
❶	I/O Cassette	Removable I/O Cassette				
❷	I/O Terminal Block	Signal & control connections	2.1 mm^2 (14 AWG)	0.30 mm^2 (22 AWG)	0.6 N-m (5.2 lb.-in.)	0.6 N-m (5.2 lb.-in.)
❸	Encoder Terminal Block(1)	Encoder power & signal connections	0.75 mm^2 (18 AWG)	0.196 mm^2 (24 AWG)	0.6 N-m (5.2 lb.-in.)	0.6 N-m (5.2 lb.-in.)

(1) Not available with Standard Control option.

(2) Maximum/minimum that the terminal block will accept - these are not recommendations.

Figure 1.7 Standard Control Option I/O Terminal Designations

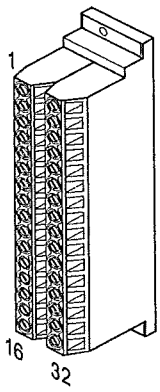

Standard Control Option	No.	Signal	Factory Default	Description	Related Param.
	1	Anlg Volts In 1 (–)	(2)	Isolated (3), bipolar, differential, ±10V, 11 bit & sign, 88k ohm input impedance.	320 - 327
	2	Anlg Volts In 1 (+)			
	3	Anlg Volts In 2 (–)	(2)	Isolated (4), bipolar, differential, ±10V, 11 bit & sign, 88k ohm input impedance.	
	4	Anlg Volts In 2 (+)			
	5	Pot Common	–	For (+) and (–) 10V pot references.	
	6	Anlg Volts Out 1 (–)	(2)	Bipolar, ±10V, 11 bit & sign, 2k ohm minimum load.	340 - 344
	7	Anlg Volts Out 1 (+)			
	8	Anlg Current Out 1 (–)	(2)	4-20mA, 11 bit & sign, 400 ohm maximum load.	
	9	Anlg Current Out 1 (+)			
	10	Reserved for Future Use			
	11	Digital Out 1 – N.C. (1)	Fault	Max. Resistive Load: 240V AC/30V DC – 1200VA, 150W Max. Current: 5A, Min. Load: 10mA Max. Inductive Load: 240V AC/30V DC – 840VA, 105W Max. Current: 3.5A, Min. Load: 10mA	380 - 387
	12	Digital Out 1 Common			
	13	Digital Out 1 – N.O. (1)	NOT Fault		
	14	Digital Out 2 – N.C. (1)	NOT Run		
	15	Digital Out 2 Common			
	16	Digital Out 2 – N.O. (1)	Run		
	17	Anlg Current In 1 (–)	(2)	Isolated (3), 4-20mA, 11 bit & sign, 124 ohm input impedance.	320 - 327
	18	Anlg Current In 1 (+)			
	19	Anlg Current In 2 (–)	(2)	Isolated (4), 4-20mA, 11 bit & sign, 124 ohm input impedance.	
	20	Anlg Current In 2 (+)			
	21	–10V Pot Reference	–	2k ohm minimum.	
	22	+10V Pot Reference	–		
	23	Reserved for Future Use			
	24	+24V DC (5)	–	Drive supplied logic input power. (5)	
	25	Digital In Common	–		
	26	24V Common (5)	–	Drive supplied logic input power. (5)	
	27	Digital In 1	Stop - CF	115V AC, 50/60 Hz - Opto isolated Low State: less than 30V AC High State: greater than 100V AC 24V AC/DC, 50/60 Hz - Opto isolated Low State: less than 5V AC/DC High State: greater than 20V AC/DC 11.2 mA DC	361 - 366
	28	Digital In 2	Start		
	29	Digital In 3	Jog		
	30	Digital In 4	Speed Sel 1		
	31	Digital In 5	Speed Sel 2		
	32	Digital In 6	Speed Sel 3		

(1) Contacts in unpowered state. Any relay programmed as Fault or Alarm will energize (pick up) when power is applied to drive and deenergize (drop out) when a fault or alarm exists. Relays selected for other functions will energize only when that condition exists and will deenergize when condition is removed.

(2) These inputs/outputs are dependant on a number of parameters. See "Related Parameters."

(3) Differential Isolation - External source must be maintained at less than 160V with respect to PE. Input provides high common mode immunity.

(4) Differential Isolation - External source must be less than 10V with respect to PE.

(5) 150mA maximum Load. Not present on 115V versions.

Figure 1.8 Vector Control Option I/O Terminal Designations

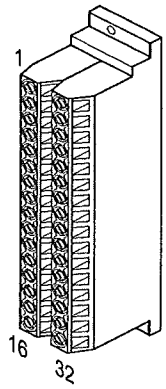

Vector Control Option	No.	Signal	Factory Default	Description	Related Param.
	1	Analog In 1 (–)(1)	(2)	Isolated(3), bipolar, differential, ±10V/4-20mA, 11 bit & sign, 88k ohm input impedance. For 4-20mA, a jumper must be installed at terminals 17 & 18 (or 19 & 20).	320 - 327
	2	Analog In 1 (+)(1)			
	3	Analog In 2 (–)(1)			
	4	Analog In 2 (+)(1)			
	5	Pot Common	–	For (+) and (–) 10V pot references.	
	6	Analog Out 1 (–)	(2)	Bipolar (current output is not bipolar), ±10V/4-20mA, 11 bit & sign, voltage mode - limit current to 5 mA. Current mode - max. load resistance is 400 ohms.	340 - 347
	7	Analog Out 1 (+)			
	8	Analog Out 2 (–)			
	9	Analog Out 2 (+)			
	10	Reserved for Future Use			
	11	Digital Out 1 – N.C.(4)	Fault	Max. Resistive Load: 240V AC/30V DC – 1200VA, 150W Max. Current: 5A, Min. Load: 10mA Max. Inductive Load: 240V AC/30V DC – 840VA, 105W Max. Current: 3.5A, Min. Load: 10mA	380 - 391
	12	Digital Out 1 Common			
	13	Digital Out 1 – N.O.(4)	NOT Fault		
	14	Digital Out 2 – N.C.(4)	NOT Run		
	15	Digital Out 2/3 Com.			
	16	Digital Out 3 – N.O.(4)	Run		
	17	Current In Jumper(1) – Analog In 1		Placing a jumper across terminals 17 & 18 (or 19 & 20) will configure that analog input for current.	
	18				
	19	Current In Jumper(1) – Analog In 2			
	20				
	21	–10V Pot Reference	–	2k ohm minimum load.	
	22	+10V Pot Reference	–		
	23	Reserved for Future Use			
	24	+24VDC(5)	–	Drive supplied logic input power. (5)	
	25	Digital In Common	–		
	26	24V Common(5)	–	Same as terminal 24.	
	27	Digital In 1	Stop - CF	115V AC, 50/60 Hz - Opto isolated Low State: less than 30V AC High State: greater than 100V AC 24V DC - Opto isolated Low State: less than 5V DC High State: greater than 20V DC 11.2 mA DC	361 - 366
	28	Digital In 2	Start		
	29	Digital In 3	Jog		
	30	Digital In 4	Speed Sel 1		
	31	Digital In 5	Speed Sel 2		
	32	Digital In 6/Hardware Enable, see pg. 1-19	Speed Sel 3		

(1) **Important:** 4-20mA operation requires a jumper at terminals 17 & 18 (or 19 & 20). Drive damage may occur if jumper is not installed.

(2) These inputs/outputs are dependant on a number of parameters (see "Related Parameters").

(3) Differential Isolation - External source must be maintained at less than 160V with respect to PE. Input provides high common mode immunity.

(4) Contacts in unpowered state. Any relay programmed as Fault or Alarm will energize (pick up) when power is applied to drive and deenergize (drop out) when a fault or alarm exists. Relays selected for other functions will energize only when that condition exists and will deenergize when condition is removed.

(5) 150mA maximum Load. Not present on 115V versions.

Encoder Terminal Block (Vector Control Option Only)

Table 1.H Encoder Terminal Designations

See "Detail" in Figure 1.6

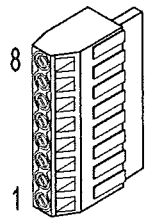

No.	Description (refer to page A-3 for encoder specifications)	
8	+12V DC Power	Internal power source 250 mA.
7	+12V DC Return (Common)	
6	Encoder Z (NOT)	Pulse, marker or registration input.
5	Encoder Z	
4	Encoder B (NOT)	Quadrature B input.
3	Encoder B	
2	Encoder A (NOT)	Single channel or quadrature A input.
1	Encoder A	

Figure 1.9 Sample Encoder Wiring

I/O	Connection Example	I/O	Connection Example
Encoder Power – Internal Drive Power Internal (drive) 12V DC, 250mA	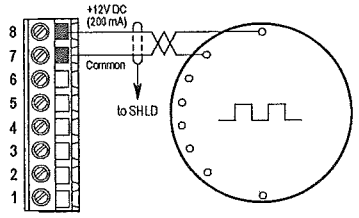	**Encoder Power – External Power Source**	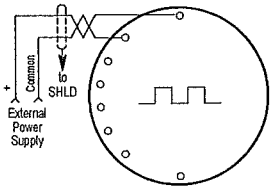
Encoder Signal – Single-Ended, Dual Channel	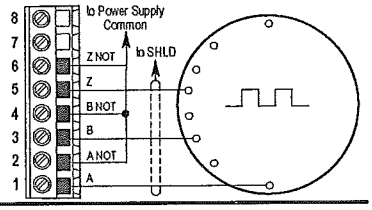	**Encoder Signal – Differential, Dual Channel**	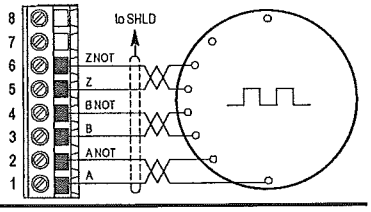

Hardware Enable Circuitry (Vector Control Option Only)

By default, the user can program a digital input as an Enable input. The status of this input is *interpreted by drive software*. If the application requires the drive to be disabled *without* software interpretation, a "dedicated" hardware enable configuration can be utilized. This is done by removing a jumper and wiring the enable input to "Digital In 6" (see below).

1. Remove the I/O Control Cassette & cover as described on page 1-16.
2. Locate & remove Jumper J10 on the Main Control Board (see diagram).
3. Re-assemble cassette.
4. Wire Enable to "Digital In 6" (see Figure 1.8).
5. Verify that [Digital In6 Sel], parameter 366 is set to "1, Enable."

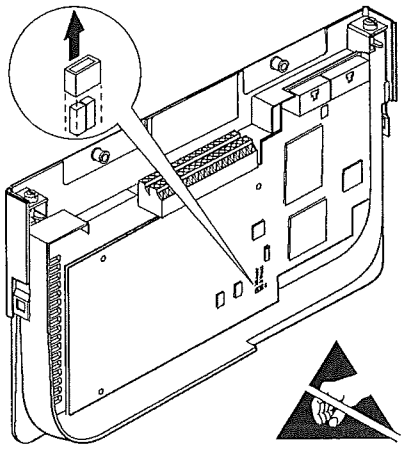

I/O Wiring Examples – Standard & Vector Control Options

Input/Output	Connection Example	Required Parameter Changes
Potentiometer Unipolar Speed Reference (1) 10k Ohm Pot. Recommended (2k Ohm Minimum)	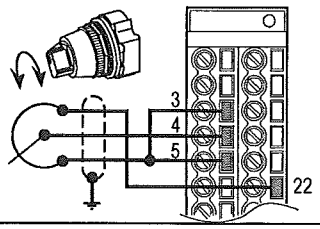	• Adjust Scaling: Parameters 91/92 and 325/326 • View Results: Parameter 002
Joystick Bipolar Speed Reference (1) ±10V Input	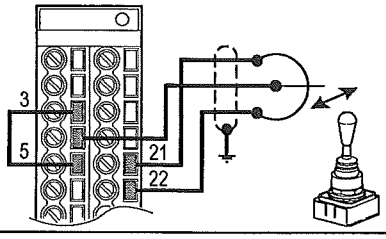	• Set Direction Mode: Parameter 190 = "1, Bipolar" • Adjust Scaling: Parameters 91/92 and 325/326 • View Results: Parameter 002
Analog Input Bipolar Speed Reference ±10V Input	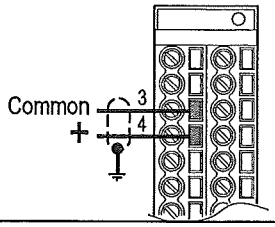	• Set Direction Mode: Parameter 190 = "1, Bipolar" • Adjust Scaling: Parameters 91/92 and 325/326 • View Results: Parameter 002
Analog Voltage Input Unipolar Speed Reference 0 to +10V Input	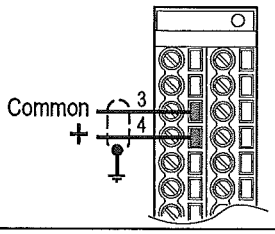	• Configure Input with parameter 320 • Adjust Scaling: Parameters 91/92 and 325/326 • View results: Parameter 002
Analog Current Input Unipolar Speed Reference **Standard** 4-20 mA Input	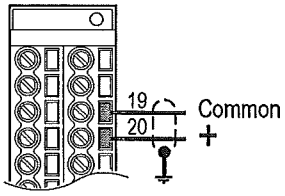	• Configure Input for Current: Parameter 320, Bit 1 = "1, Current" • Adjust Scaling: Parameters 91/92 and 325/326 • View Results: Parameter 002
Analog Current Input Unipolar Speed Reference **Vector** 4-20 mA Input	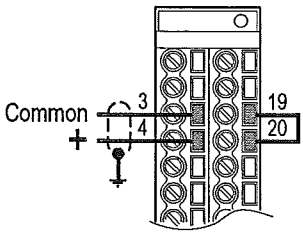	• Configure Input for Current: Parameter 320 and add jumper at appropriate terminals • Adjust Scaling: Parameters 91/92 and 325/326 • View results: Parameter 002
Analog Output ±10V, 4-20 mA Bipolar +10V Unipolar *(shown)* Standard Control 4-20 mA Unipolar *(use term. 8 & 9)*	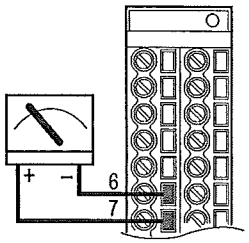	• Configure with Parameter 340 • Select Source Value: Parameter 384, [Digital Out1 Sel] • Adjust Scaling: Parameters 343/344

(1) Refer to the Attention statement on page 1-15 for important bipolar wiring information.

I/O Wiring Examples (continued)

Input/Output	Connection Example	Required Parameter Changes
2-Wire Control Non-Reversing(1) 24V DC internal supply	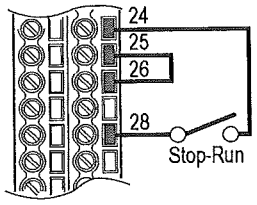	• Disable Digital Input:#1: Parameter 361 = "0, Unused" • Set Digital Input #2: Parameter 362 = "7, Run" • Set Direction Mode: Parameter 190 = "0, Unipolar"
2-Wire Control Reversing(1) External supply (I/O Board dependent)	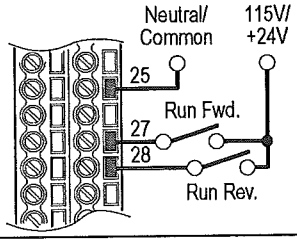	• Set Digital Input:#1: Parameter 361 = "8, Run Forward" • Set Digital Input #2: Parameter 362 = "9, Run Reverse"
3-Wire Control Internal supply	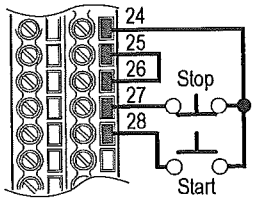	• No Changes Required
3-Wire Control External supply (I/O Board dependent). Requires 3-wire functions only ([Digital In1 Sel]). Using 2-wire selections will cause a type 2 alarm (page 4-9).	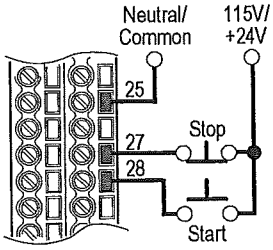	• No Changes Required
Digital Output Relays shown in powered state with drive faulted. See pages 1-18 & 1-17. Standard Control 1 relay at terminals 14-16. Vector Control 2 relays at terminals 14-16.	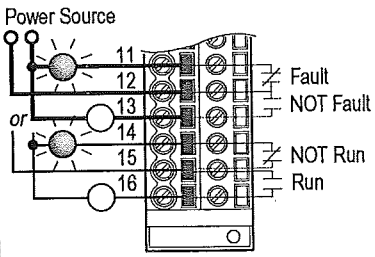	• Select Source to Activate: Parameters 380/384
Enable Input	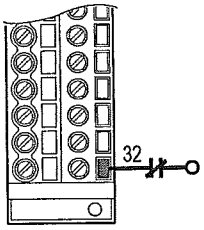	• Standard Control Configure with parameter 366 • Vector Control Configure with parameter 366 For dedicated hardware Enable: Remove Jumper J10 (see page 1-19)

(1) **Important:** Programming inputs for 2 wire control deactivates all HIM Start buttons.

Reference Control

"Auto" Speed Sources

The drive speed command can be obtained from a number of different sources. The source is determined by drive programming and the condition of the Speed Select digital inputs, Auto/Manual digital inputs or reference select bits of a command word.

The default source for a command reference (all speed select inputs open or not programmed) is the selection programmed in [Speed Ref A Sel]. If any of the speed select inputs are closed, the drive will use other parameters as the speed command source.

"Manual" Speed Sources

The manual source for speed command to the drive is either the HIM requesting manual control (see ALT Functions on page B-2) or the control terminal block (analog input) if a digital input is programmed to "Auto/Manual."

Changing Speed Sources

The selection of the active Speed Reference can be made through digital inputs, DPI command, jog button or Auto/Manual HIM operation.

Figure 1.10 Speed Reference Selection Chart(1)

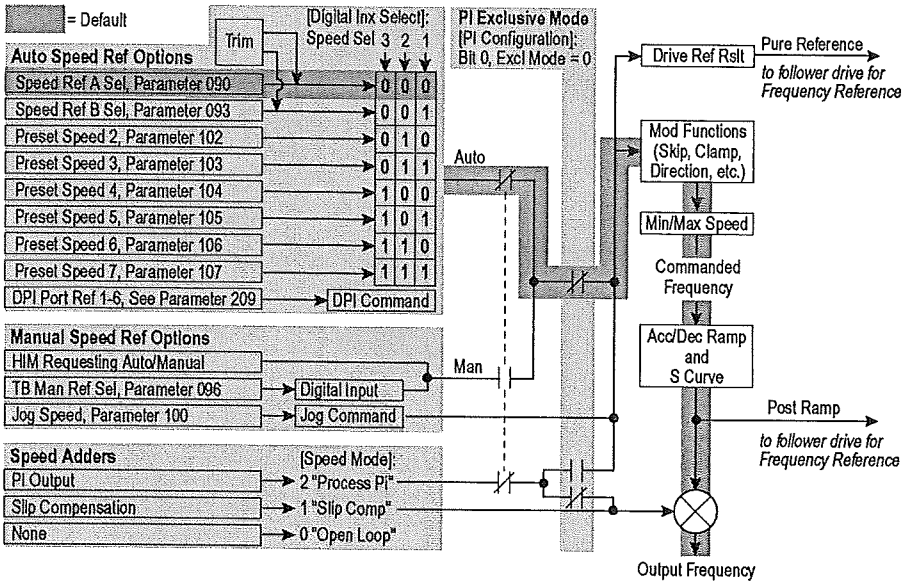

Torque Reference Source (Vector Control Option Only)

The torque reference is normally supplied by an analog input or network reference. Switching between available sources while the drive is running is not available. Digital inputs programmed as "Speed Sel 1,2,3" and the HIM Auto/Manual function (see above) do not affect the active torque reference when the drive is in Vector Control Mode.

(1) To access Preset Speed 1, set parameter 090 or 093 to "Preset Speed 1."

Auto/Manual Examples

PLC = Auto, HIM = Manual

A process is run by a PLC when in Auto mode and requires manual control from the HIM during set-up. The Auto speed reference is issued by the PLC through a communications module installed in the drive. Since the internal communications is designated as Port 5, [Speed Ref A Sel] is set to "DPI Port 5" with the drive running from the Auto source.

Attain Manual Control

- Press ALT then Auto/Man on the HIM.
  When the HIM attains manual control, the drive speed command comes from the HIM speed control keys or analog potentiometer.

Release to Auto Control

- Press ALT then Auto/Man on the HIM again.
  When the HIM releases manual control, the drive speed command returns to the PLC.

PLC = Auto, Terminal Block = Manual

A process is run by a PLC when in Auto mode and requires manual control from an analog potentiometer wired to the drive terminal block. The auto speed reference is issued by the PLC through a communications module installed in the drive. Since the internal communications is designated as Port 5, [Speed Ref A Sel] is set to "DPI Port 5" with the drive running from the Auto source. Since the Manual speed reference is issued by an analog input ("Analog In 1 or 2"), [TB Man Ref Sel] is set to the same input. To switch between Auto and Manual, [Digital In4 Sel] is set to "Auto/ Manual".

Attain Manual Control

- Close the digital input.
  With the input closed, the speed command comes from the pot.

Release to Auto Control

- Open the digital input.
  With the input open, the speed command returns to the PLC.

Auto/Manual Notes

1. Manual control is exclusive. If a HIM or Terminal Block takes manual control, no other device can take manual control until the controlling device releases manual control.
2. If a HIM has manual control and power is removed from the drive, the drive will return to Auto mode when power is reapplied.

EMC Instructions

CE Conformity

Conformity with the Low Voltage (LV) Directive and Electromagnetic Compatibility (EMC) Directive has been demonstrated using harmonized European Norm (EN) standards published in the Official Journal of the European Communities. PowerFlex Drives comply with the EN standards listed below when installed according to the User and Reference Manual.

CE Declarations of Conformity are available online at:
http://www.ab.com/certification/ce/docs.

Low Voltage Directive (73/23/EEC)

- EN50178 Electronic equipment for use in power installations.

EMC Directive (89/336/EEC)

- EN61800-3 Adjustable speed electrical power drive systems Part 3: EMC product standard including specific test methods.

General Notes

- If the adhesive label is removed from the top of the drive, the drive must be installed in an enclosure with side openings less than 12.5 mm (0.5 in.) and top openings less than 1.0 mm (0.04 in.) to maintain compliance with the LV Directive.
- The motor cable should be kept as short as possible in order to avoid electromagnetic emission as well as capacitive currents.
- Use of line filters in ungrounded systems is not recommended.
- PowerFlex drives may cause radio frequency interference if used in a residential or domestic environment. The user is required to take measures to prevent interference, in addition to the essential requirements for CE compliance listed below, if necessary.
- Conformity of the drive with CE EMC requirements does not guarantee an entire machine or installation complies with CE EMC requirements. Many factors can influence total machine/installation compliance.
- PowerFlex drives can generate conducted low frequency disturbances (harmonic emissions) on the AC supply system. More information regarding harmonic emissions can be found in the *PowerFlex Reference Manual.*

Essential Requirements for CE Compliance

Conditions 1-6 listed below **must be** satisfied for PowerFlex drives to meet the requirements of **EN61800-3**.

1. Standard PowerFlex 700 CE compatible Drive.
2. Review important precautions/attention statements throughout this manual before installing the drive.
3. Grounding as described on page 1-4.
4. Output power, control (I/O) and signal wiring must be braided, shielded cable with a coverage of 75% or better, metal conduit or equivalent attenuation.
5. All shielded cables should terminate with the proper shielded connector.
6. Conditions in Table 1.I.

Table 1.I PowerFlex 700 EN61800-3 EMC Compatibility

Frame	Second Environment *Restrict Motor Cable to 30 m (98 ft.)*	First Environment Restricted Distribution
	Any Drive and Option	
0	✔	*Refer to PowerFlex Reference Manual*
1	✔	
2	✔	
3	✔	

Notes:

Start Up

This chapter describes how you start up the PowerFlex 700 Drive. Refer to Appendix B for a brief description of the LCD HIM (Human Interface Module).

For information on . . .	See page . . .
Prepare For Drive Start-Up	2-1
Status Indicators	2-2
Start-Up Routines	2-3
Running S.M.A.R.T. Start	2-4
Running an Assisted Start Up	2-4

ATTENTION: Power must be applied to the drive to perform the following start-up procedure. Some of the voltages present are at incoming line potential. To avoid electric shock hazard or damage to equipment, only qualified service personnel should perform the following procedure. Thoroughly read and understand the procedure before beginning. If an event does not occur while performing this procedure, **Do Not Proceed. Remove Power** including user supplied control voltages. User supplied voltages may exist even when main AC power is not applied to then drive. Correct the malfunction before continuing.

Prepare For Drive Start-Up

Before Applying Power to the Drive

❑ 1. Confirm that all inputs are connected to the correct terminals and are secure.

❑ 2. Verify that AC line power at the disconnect device is within the rated value of the drive.

❑ 3. Verify that control power voltage is correct.

The remainder of this procedure requires that a HIM be installed. If an operator interface is not available, remote devices should be used to start up the drive.

Applying Power to the Drive

❑ 4. Apply AC power and control voltages to the drive.

If any of the six digital inputs are configured to "Stop – CF" (CF = Clear Fault) or "Enable," verify that signals are present or reconfigure [Digital Inx Sel]. If an I/O option is not installed (i.e. no I/O terminal block), verify that [Digital Inx Sel] is not configured to "Stop – CF" or "Enable." If this is not done, the drive will not start. Refer to Alarm Descriptions on page 4-9 for a list of potential digital input conflicts. If a fault code appears, refer to Chapter 4.

If the STS LED is not flashing green at this point, refer to Status Indicators below.

❑ 5. Proceed to Start-Up Routines.

Status Indicators

Figure 2.1 Drive Status Indicators

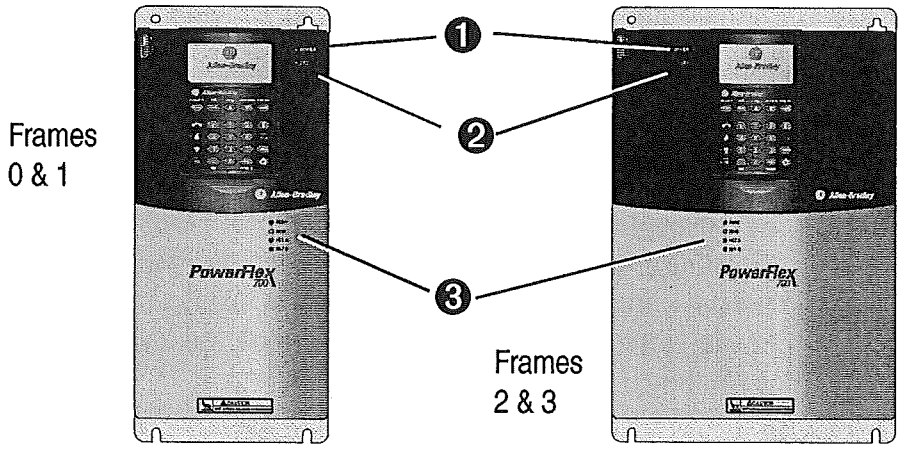

#	Name	Color	State	Description
1	PWR (Power)	Green	Steady	Illuminates when power is applied to the drive.
2	STS (Status)	Green	Flashing	Drive ready, but not running and no faults are present.
			Steady	Drive running, no faults are present.
		Yellow See page 4-9	Flashing, Drive Stopped	A type 2 alarm condition exists, the drive cannot be started. Check parameter 212 [Drive Alarm 2].
			Flashing, Drive Running	An intermittent type 1 alarm condition is occurring. Check parameter 211 [Drive Alarm 1].
			Steady, Drive Running	A continuous type 1 alarm condition exists. Check parameter 211 [Drive Alarm 1].
		Red See page 4-4	Flashing	Fault has occurred. Check [Fault x Code] or Fault Queue.
			Steady	A non-resettable fault has occurred.
3	PORT	Refer to the Communication Adapter User Manual.		Status of DPI port internal communications (if present).
	MOD			Status of communications module (when installed).
	NET A			Status of network (if connected).
	NET B			Status of secondary network (if connected).

Start-Up Routines

The PowerFlex 700 is designed so that start up is simple and efficient. If you have an LCD HIM, two start-up methods are provided, allowing the user to select the desired level needed for the application.

- **S.M.A.R.T. Start**
  This routine allows you to quickly set up the drive by programming values for the most commonly used functions (see below).

- **Assisted Start Up**
  This routine prompts you for information that is needed to start up a drive for most applications, such as line and motor data, commonly adjusted parameters and I/O. The Vector Control option provides two levels of Assisted Start Up; Basic and Detailed.

Figure 2.2 Standard Control Option Start Up Menu

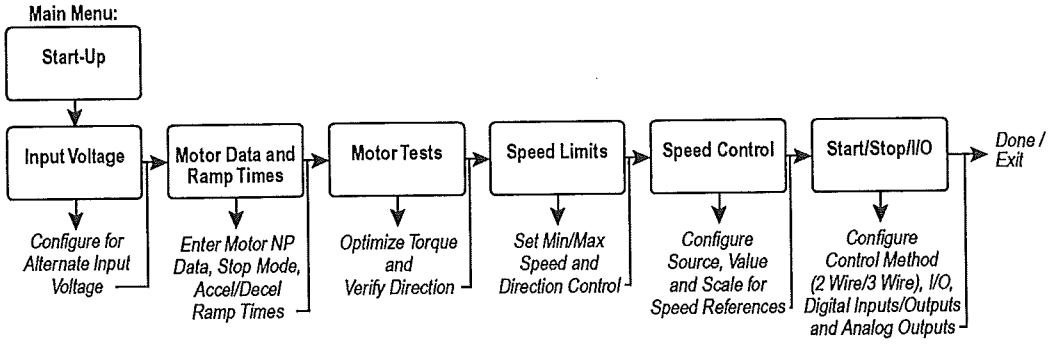

Important Information

Power must be applied to the drive when viewing or changing parameters. Previous programming may affect the drive status and operation when power is applied. If the I/O Cassette has been changed, a **Reset Defaults** operation must be performed.

Figure 2.3 Vector Control Option Start Up Menu

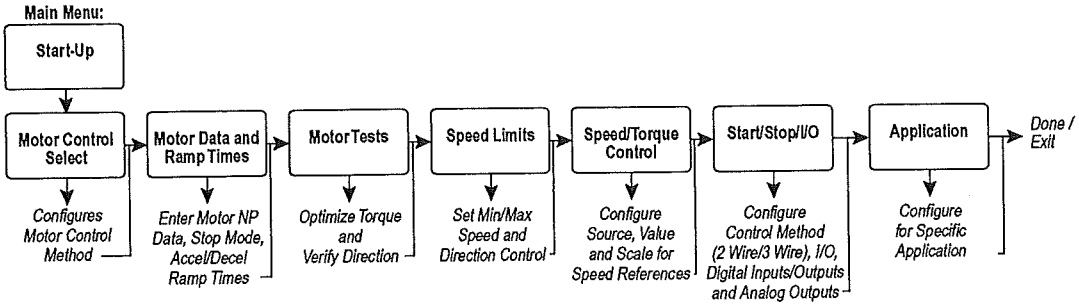

Running S.M.A.R.T. Start

During a Start Up, the majority of applications require changes to only a few parameters. The LCD HIM on a PowerFlex 700 drive offers S.M.A.R.T. start, which displays the most commonly changed parameters. With these parameters, you can set the following functions:

S - Start Mode and Stop Mode
M - Minimum and Maximum Speed
A - Accel Time 1 and Decel Time 1
R - Reference Source
T - Thermal Motor Overload

To run a S.M.A.R.T. start routine:

Step	Key(s)	Example LCD Displays
1. Press ALT and then Esc (S.M.A.R.T). The S.M.A.R.T. start screen appears. 2. View and change parameter values as desired. For HIM information, see Appendix B. 3. Press Esc to exit the S.M.A.R.T. start.	ALT Esc Esc	F-> Stopped Auto SMART List: Digital In2 Sel Stop Mode A Minimum Speed

Running an Assisted Start Up

Important: This start-up routine requires an LCD HIM.

The Assisted start-up routine asks simple yes or no questions and prompts you to input required information. Access Assisted Start Up by selecting "Start Up" from the Main Menu.

To perform an Assisted Start-Up

Step	Key(s)	Example LCD Displays
1. In the Main Menu, press the Up Arrow or Down Arrow to scroll to "Start Up". 2. Press Enter.	▲ ▼ ↵	F-> Stopped Auto 0.0 Hz Main Menu: Memory Storage Start Up Preferences

Programming and Parameters

Chapter 3 provides a complete listing and description of the PowerFlex 700 parameters. The parameters can be programmed (viewed/edited) using an LCD HIM (Human Interface Module). As an alternative, programming can also be performed using DriveExplorer™ or DriveExecutive™ software and a personal computer. Refer to Appendix B for a brief description of the LCD HIM.

For information on . . .	See page . . .
About Parameters	3-1
How Parameters are Organized	3-3
Monitor File	3-10
Motor Control File	3-12
Speed Command File	3-19
Dynamic Control File	3-27
Utility File	3-34
Communication File	3-43
Inputs & Outputs File	3-47
Parameter Cross Reference – by Name	3-52
Parameter Cross Reference – by Number	3-55

About Parameters

To configure a drive to operate in a specific way, drive parameters may have to be set. Three types of parameters exist:

- **ENUM Parameters**
  ENUM parameters allow a selection from 2 or more items. The LCD HIM will display a text message for each item.
- **Bit Parameters**
  Bit parameters have individual bits associated with features or conditions. If the bit is 0, the feature is off or the condition is false. If the bit is 1, the feature is on or the condition is true.
- **Numeric Parameters**
  These parameters have a single numerical value (i.e. 0.1 Volts).

The example on the following page shows how each parameter type is presented in this manual.

❶ File	❷ Group	❸ No.	❹ Parameter Name & Description	❺ Values	❻ Related
UTILITY	Drive . . .	198	**[Load Frm Usr Set]** Loads a previously saved set of parameter values from a selected user set location in drive nonvolatile memory to active drive memory.	Default: 0 "Ready" Options: 0 "Ready" 1 "User Set 1" 2 "User Set 2" 3 "User Set 3"	199
UTILITY	Diagnostics	216	**[Dig In Status]** Status of the digital inputs.		
MOTOR . . .	Torq . . .	434	Vector **[Torque Ref B Mult]** Defines the value of the multiplier for the [Torque Ref B Sel] selection.	Default: 1.0 Min/Max: –/+32767.0 Units: 0.1	

Bit #	15	14	13	12	11	10	9	8	7	6	5	4	3	2	1	0
	x	x	x	x	x	x	x	x	x	x	0	0	0	0	0	0
											Digital In6	Digital In5	Digital In4	Digital In3	Digital In2	Digital In1

1 = Input Present
0 = Input Not Present
x = Reserved

No.	Description
❶	**File** – Lists the major parameter file category.
❷	**Group** – Lists the parameter group within a file.
❸	**No.** – Parameter number. = Stop drive before changing this parameter. 32 = 32 bit parameter in the Standard Control option. All parameters in the Vector Control option are 32 bit. FV = Parameter only displayed when [Motor Cntl Sel] is set to "4."
❹	**Parameter Name & Description** – Parameter name as it appears on an LCD HIM, with a brief description of the parameters function. Standard = This parameter is specific to the Standard Control Option. Vector = This parameter will only be available with the Vector Control option.
❺	**Values** – Defines the various operating characteristics of the parameter. Three types exist.

ENUM	Default:	Lists the value assigned at the factory. "Read Only" = no default.
	Options:	Displays the programming selections available.
Bit	Bit:	Lists the bit place holder and definition for each bit.
Numeric	Default:	Lists the value assigned at the factory. "Read Only" = no default.
	Min/Max:	The range (lowest and highest setting) possible for the parameter.
	Units:	Unit of measure and resolution as shown on the LCD HIM.

Important: Some parameters will have two unit values:
- Analog inputs can be set for current or voltage with [Anlg In Config], param. 320.
- Setting [Speed Units], parameter 79 on Vector Control drives selects Hz or RPM.
- Values that pertain to Vector Control drives only will be indicated by "Vector."

Important: When sending values through DPI ports, simply remove the decimal point to arrive at the correct value (i.e. to send "5.00 Hz," use "500").

❻	**Related** – Lists parameters (if any) that interact with the selected parameter. The symbol "i" indicates that additional parameter information is available in Appendix C.

How Parameters are Organized

The LCD HIM displays parameters in a **File-Group-Parameter** or **Numbered List** view order. To switch display mode, access the Main Menu, press ALT, then Sel while cursor is on the parameter selection. In addition, using [Param Access Lvl], the user has the option to display *all* parameters, commonly used parameters or diagnostic parameters.

Control Options

Two different control options are available for the PowerFlex 700; Standard and Vector. The Standard Control option provides typical Volts per Hertz and Sensorless Vector operation. The Vector Control option provides the added capability of FVC Vector control. The cassette determines the type of control you have available (see diagram).

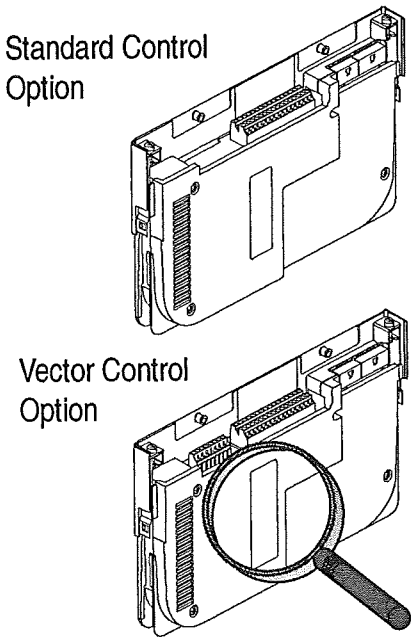

To simplify programming with the Vector Control option, the displayed parameters will change according to the selection made with [Motor Cntl Sel]. For example, if "FVC Vector" is selected, the parameters associated solely with other operations such as Volts per Hertz or Sensorless Vector will be hidden. Refer to pages 3-4 through 3-8.

File-Group-Parameter Order

This simplifies programming by grouping parameters that are used for similar functions. The parameters are organized into 6 files in Basic Parameter view or 7 files in Advanced Parameter view. Each file is divided into groups, and each parameter is an element in a group. By default, the LCD HIM displays parameters by File-Group-Parameter view.

Numbered List View

All parameters are in numerical order.

Basic Parameter View – Standard Control Option

Parameter 196 [Param Access Lvl] set to option 0 "Basic."

File	Group	Parameters					
Monitor	Metering	Output Freq	001				
		Commanded Freq	002				
		Output Current	003				
		DC Bus Voltage	012				
Motor Control	Motor Data	Motor NP Volts	041	Motor NP RPM	044	Motor OL Hertz	047
		Motor NP FLA	042	Motor NP Power	045		
		Motor NP Hertz	043	Mtr NP Pwr Units	046		
	Torq Attributes	Torque Perf Mode	053	Maximum Freq	055		
		Maximum Voltage	054	Autotune	061		
Speed Command	Spd Mode & Limits	Minimum Speed	081				
		Maximum Speed	082				
	Speed References	Speed Ref A Sel	090	Speed Ref B Hi	094	TB Man Ref Sel	096
		Speed Ref B Sel	093	Speed Ref A Lo	092	TB Man Ref Hi	097
		Speed Ref A Hi	091	Speed Ref B Lo	095	TB Man Ref Lo	098
	Discrete Speeds	Jog Speed	100				
		Preset Speed 1-7	101-107				
Dynamic Control	Ramp Rates	Accel Time 1	140	Decel Time 1	142	S-Curve %	146
		Accel Time 2	141	Decel Time 2	143		
	Load Limits	Current Lmt Sel	147				
		Current Lmt Val	148				
	Stop/Brake Modes	Stop Mode A	155	DC Brk Lvl Sel	157	Bus Reg Mode A	161
		Stop Mode B	156	DC Brake Level	158	Bus Reg Mode B	162
				DC Brake Time	159	DB Resistor Type	163
	Restart Modes	Start At PowerUp	168	Auto Rstrt Tries	174	Auto Rstrt Delay	175
	Power Loss	Power Loss Mode	184	Power Loss Time	185		
Utility	Direction Config	Direction Mode	190				
	Drive Memory	Param Access Lvl	196	Save To User Set	199		
		Reset To Defalts	197	Language	201		
		Load Frm Usr Set	198				
	Faults	Fault Config 1	238				
Inputs & Outputs	Analog Inputs	Anlg In Config	320	Analog In1 Lo	323		
		Analog In1 Hi	322	Analog In2 Lo	326		
		Analog In2 Hi	325				
	Analog Outputs	Analog Out1 Sel	342				
		Analog Out1 Hi	343				
		Analog Out1 Lo	344				
	Digital Inputs	Digital In1-6 Sel	361-366				
	Digital Outputs	Digital Out1 Sel	380	Dig Out1 Level	381		
		Digital Out2 Sel	384	Dig Out2 Level	385		

Basic Parameter View – Vector Control Option

Parameter 196 [Param Access Lvl] set to option 0 "Basic."

File	Group	Parameters					
Monitor	Metering	Output Freq	001				
		Commanded Speed	002				
		Commanded Torque**	024				
		Output Current	003				
		Torque Current	004				
		DC Bus Voltage	012				
Motor Control	Motor Data	Motor NP Volts	041	Motor NP RPM	044	Motor OL Hertz	047
		Motor NP FLA	042	Motor NP Power	045	Motor Poles	049
		Motor NP Hertz	043	Mtr NP Pwr Units	046		
	Torq Attributes	Motor Cntl Sel	053	Autotune Torque**	066	Torque Ref A Lo**	429
		Maximum Voltage	054	Inertia Autotune**	067	Pos Torque Limit**	436
		Maximum Freq	055	Torque Ref A Sel**	427	Neg Torque Limit**	437
		Autotune	061	Torque Ref A Hi**	428		
	Speed Feedback	Motor Fdbk Type	412	Encoder PPR	413		
Speed Command	Spd Mode & Limits	Speed Units	079	Minimum Speed	081	Rev Speed Limit**	454
		Feedback Select	080	Maximum Speed	082		
	Speed References	Speed Ref A Sel	090	Speed Ref B Hi	094	TB Man Ref Lo	098
		Speed Ref A Hi	091	Speed Ref B Lo	095	Pulse Input Ref	099
		Speed Ref A Lo	092	TB Man Ref Sel	096		
		Speed Ref B Sel	093	TB Man Ref Hi	097		
	Discrete Speeds	Jog Speed 1	100	Jog Speed 2	108		
		Preset Speed 1-7	101-107				
Dynamic Control	Ramp Rates	Accel Time 1	140	Decel Time 1	142	S-Curve %	146
		Accel Time 2	141	Decel Time 2	143		
	Load Limits	Current Lmt Sel	147	Current Lmt Val	148		
	Stop/Brake Modes	Stop/BRK Mode A	155	DC Brk Lvl Sel	157	Bus Reg Mode A	161
		Stop/BRK Mode B	156	DC Brake Level	158	Bus Reg Mode B	162
				DC Brake Time	159	DB Resistor Type	163
	Restart Modes	Start At PowerUp	168	Auto Rstrt Tries	174	Auto Rstrt Delay	175
	Power Loss	Power Loss Mode	184	Power Loss Time	185	Power Loss Level	186
Utility	Direction Config	Direction Mode	190				
	Drive Memory	Param Access Lvl	196	Load Frm Usr Set	198	Language	201
		Reset To Defalts	197	Save To User Set	199		
	Diagnostics	Start Inhibits	214	Dig In Status	216	Dig Out Status	217
	Faults	Fault Config 1	238				
	Alarms	Alarm Config 1	259				
Inputs & Outputs	Analog Inputs	Anlg In Config	320	Analog In2 Hi	325		
		Analog In1 Hi	322	Analog In2 Lo	326		
		Analog In1 Lo	323				
	Analog Outputs	Analog Out1, 2 Sel	342	Analog Out1, 2 Lo	344	Analog Out2 Hi	346
		Analog Out1 Hi	343	Analog Out1, 2 Sel	345	Analog Out1, 2 Lo	347
	Digital Inputs	Digital In1-6 Sel	361-366				
	Digital Outputs	Digital Out1-3 Sel	380-388	Dig Out1-3 Level	381-389		

** These parameters will only be displayed when parameter 053 [Motor Cntl Sel] is set to option "4."

Advanced Parameter View – Standard Control Option

Parameter 196 [Param Access Lvl] set to option 1 "Advanced."

File	Group	Parameters					
Monitor	Metering	Output Freq	001	Output Voltage	006	MOP Frequency	011
		Commanded Freq	002	Output Power	007	DC Bus Voltage	012
		Output Current	003	Output Powr Fctr	008	DC Bus Memory	013
		Torque Current	004	Elapsed MWh	009	Analog In1 Value	016
		Flux Current	005	Elapsed Run Time	010	Analog In2 Value	017
	Drive Data	Rated kW	026	Rated Amps	028		
		Rated Volts	027	Control SW Ver	029		
Motor Control	Motor Data	Motor Type	040	Motor NP RPM	044	Motor OL Factor	048
		Motor NP Volts	041	Motor NP Power	045		
		Motor NP FLA	042	Mtr NP Pwr Units	046		
		Motor NP Hertz	043	Motor OL Hertz	047		
	Torq Attributes	Torque Perf Mode	053	Flux Up Mode	057	IR Voltage Drop	062
		Maximum Voltage	054	Flux Up Time	058	Flux Current Ref	063
		Maximum Freq	055	SV Boost Filter	059	IXo Voltage Drop	064
		Compensation	056	Autotune	061		
	Volts per Hertz	Start/Acc Boost	069	Break Voltage	071		
		Run Boost	070	Break Frequency	072		
Speed Command	Spd Mode & Limits	Speed Mode	080	Overspeed Limit	083	Skip Frequency 3	086
		Minimum Speed	081	Skip Frequency 1	084	Skip Freq Band	087
		Maximum Speed	082	Skip Frequency 2	085		
	Speed References	Speed Ref A Sel	090	Speed Ref B Sel	093	TB Man Ref Sel	096
		Speed Ref A Hi	091	Speed Ref B Hi	094	TB Man Ref Hi	097
		Speed Ref A Lo	092	Speed Ref B Lo	095	TB Man Ref Lo	098
	Discrete Speeds	Jog Speed	100				
		Preset Speed 1-7	101-107				
	Speed Trim	Trim In Select	117	Trim Hi	119		
		Trim Out Select	118	Trim Lo	120		
	Slip Comp	Slip RPM @ FLA	121	Slip RPM Meter	123		
		Slip Comp Gain	122				
	Process PI	PI Configuration	124	PI Integral Time	129	PI Status	134
		PI Control	125	PI Prop Gain	130	PI Ref Meter	135
		PI Reference Sel	126	PI Lower Limit	131	PI Fdback Meter	136
		PI Setpoint	127	PI Upper Limit	132	PI Error Meter	137
		PI Feedback Sel	128	PI Preload	133	PI Output Meter	138
Dynamic Control	Ramp Rates	Accel Time 1	140	Decel Time 1	142	S Curve %	146
		Accel Time 2	141	Decel Time 2	143		
	Load Limits	Current Lmt Sel	147	Drive OL Mode	150		
		Current Lmt Val	148	PWM Frequency	151		
		Current Lmt Gain	149				
	Stop/Brake Modes	Stop Mode A	155	DC Brake Time	159	DB Resistor Type	163
		Stop Mode B	156	Bus Reg Ki	160	Bus Reg Kp	164
		DC Brake Lvl Sel	157	Bus Reg Mode A	161	Bus Reg Kd	165
		DC Brake Level	158	Bus Reg Mode B	162		
	Restart Modes	Start At PowerUp	168	Auto Rstrt Delay	175	Wake Time	181
		Flying Start En	169	Sleep Wake-Mode	178	Sleep Level	182
		Flying StartGain	170	Sleep-Wake Ref	179	Sleep Time	183
		Auto Rstrt Tries	174	Wake Level	180		
	Power Loss	Power Loss Mode	184				
		Power Loss Time	185				
		Power Loss Level	186				

File	Group	Parameters					
Utility	Direction Config	Direction Mode	190				
	HIM Ref Config	Save HIM Ref	192				
		Man Ref Preload	193				
	MOP Config	Save MOP Ref	194				
		MOP Rate	195				
	Drive Memory	Param Access Lvl	196	Save To User Set	199	Voltage Class	202
		Reset To Defalts	197	Reset Meters	200	Drive Checksum	203
		Load Frm Usr Set	198	Language	201		
	Diagnostics	Drive Status 1	209	Dig Out Status	217	Status 2 @ Fault	228
		Drive Status 2	210	Drive Temp	218	Alarm 1 @ Fault	229
		Drive Alarm 1	211	Drive OL Count	219	Alarm 2 @ Fault	230
		Drive Alarm 2	212	Motor OL Count	220	Testpoint 1 Sel	234
		Speed Ref Source	213	Fault Speed	224	Testpoint 1 Data	235
		Start Inhibits	214	Fault Amps	225	Testpoint 2 Sel	236
		Last Stop Source	215	Fault Bus Volts	226	Testpoint 2 Data	237
		Dig In Status	216	Status 1 @ Fault	227		
	Faults	Fault Config 1	238	Fault Clear Mode	241	Fault 1-8 Code	243-257
		Fault Clear	240	Power Up Marker	242	Fault 1-8 Time	244-258
	Alarms	Alarm Config 1	259	Alarm1-8 Code	262-269		
		Alarm Clear	261				
Communication	Comm Control	DPI Baud Rate	270	Drive Ref Rslt	272		
		Drive Logic Rslt	271	Drive Ramp Rslt	273		
	Masks & Owners	Logic Mask	276	Fault Clr Mask	283	Reference Owner	292
		Start Mask	277	MOP Mask	284	Accel Owner	293
		Jog Mask	278	Local Mask	285	Decel Owner	294
		Direction Mask	279	Stop Owner	288	Fault Clr Owner	295
		Reference Mask	280	Start Owner	289	MOP Owner	296
		Accel Mask	281	Jog Owner	290	Local Owner	297
		Decel Mask	282	Direction Owner	291		
	Datalinks	Data In A1-D2	300-307				
		Data Out A1-D2	310-317				
Inputs & Outputs	Analog Inputs	Anlg In Config	320	Analog In 2 Hi	325	Anlg In 1 Loss	324
		Anlg In Sqr Root	321	Analog In 1 Lo	323	Anlg In 2 Loss	327
		Analog In 1 Hi	322	Analog In 2 Lo	326		
	Analog Outputs	Anlg Out Config	340	Analog Out1 Hi	343		
		Anlg Out Absolut	341	Analog Out1 Lo	344		
		Analog Out1 Sel	342				
	Digital Inputs	Digital In1-6 Sel	361-366				
	Digital Outputs	Digital Out1 Sel	380	Dig Out2 Level	385	Dig Out1 OffTime	383
		Digital Out2 Sel	384	Dig Out1 OnTime	382	Dig Out2 OffTime	387
		Dig Out1 Level	381	Dig Out2 OnTime	386		

Advanced Parameter View – Vector Control Option

Parameter 196 [Param Access Lvl] set to option 1 "Advanced."

File	Group	Parameters					
Monitor	Metering	Output Freq	001	Torque Current	004	MOP Reference	011
		Commanded Speed	002	Flux Current	005	DC Bus Voltage	012
		Ramped Speed	022	Output Voltage	006	DC Bus Memory	013
		Speed Reference	023	Output Power	007	Analog In1 Value	016
		Commanded Torque**	024	Output Powr Fctr	008	Analog In2 Value	017
		Speed Feedback	025	Elapsed MWh	009		
		Output Current	003	Elapsed Run Time	010		
	Drive Data	Rated kW	026	Rated Amps	028		
		Rated Volts	027	Control SW Ver	029		
Motor Control	Motor Data	Motor Type	040	Motor NP RPM	044	Motor OL Factor	048
		Motor NP Volts	041	Motor NP Power	045	Motor Poles	049
		Motor NP FLA	042	Mtr NP Pwr Units	046		
		Motor NP Hertz	043	Motor OL Hertz	047		
	Torq Attributes	Motor Cntl Sel	053	Flux Current Ref	063	Torque Ref B Hi**	432
		Maximum Voltage	054	IXo Voltage Drop	064	Torque Ref B Lo**	433
		Maximum Freq	055	Autotune Torque**	066	Torq Ref B Mult**	434
		Compensation	056	Inertia Autotune**	067	Torque Setpoint**	435
		Flux Up Mode	057	Torque Ref A Sel**	427	Pos Torque Limit**	436
		Flux Up Time	058	Torque Ref A Hi**	428	Neg Torque Limit**	437
		SV Boost Filter	059	Torque Ref A Lo**	429	Control Status**	440
		Autotune	061	Torq Ref A Div**	430	Mtr Tor Cur Ref**	441
		IR Voltage Drop	062	Torque Ref B**	431		
	Volts per Hertz	Start/Acc Boost	069	Break Voltage*	071		
		Run Boost*	070	Break Frequency*	072		
	Speed Feedback	Motor Fdbk Type	412	Fdbk Filter Sel	416	Marker Pulse	421
		Encoder PPR	413	Notch Filter Freq**	419	Pulse In Scale	422
		Enc Position Fdbk	414	Notch Filter K**	420	Encoder Z Chan	423
		Encoder Speed	415				
Speed Command	Spd Mode & Limits	Speed Units	079	Overspeed Limit	083	Skip Freq Band*	087
		Feedback Select	080	Skip Frequency 1*	084	Speed/Torque Mod**	088
		Minimum Speed	081	Skip Frequency 2*	085	Rev Speed Limit**	454
		Maximum Speed	082	Skip Frequency 3*	086		
	Speed References	Speed Ref A Sel	090	Speed Ref B Hi	094	TB Man Ref Hi	097
		Speed Ref A Hi	091	Speed Ref B Lo	095	TB Man Ref Lo	098
		Speed Ref A Lo	092	TB Man Ref Sel	096	Pulse Input Ref	099
		Speed Ref B Sel	093				
	Discrete Speeds	Jog Speed 1	100	Preset Speed 1-7	101-107	Jog Speed 2	108
	Speed Trim	Trim In Select	117	Trim Hi	119		
		Trim Out Select	118	Trim Lo	120		
	Slip Comp	Slip RPM @ FLA	121	Slip Comp Gain*	122	Slip RPM Meter	123
	Process PI	PI Configuration	124	PI Lower Limit	131	PI Output Meter	138
		PI Control	125	PI Upper Limit	132	PI Reference Hi	460
		PI Reference Sel	126	PI Preload	133	PI Reference Lo	461
		PI Setpoint	127	PI Status	134	PI Feedback Hi	462
		PI Feedback Sel	128	PI Ref Meter	135	PI Feedback Lo	463
		PI Integral Time	129	PI Fdback Meter	136		
		PI Prop Gain	130	PI Error Meter	137		
	Speed Regulator	Ki Speed Loop**	445	Kf Speed Loop**	447	Total Inertia**	450
		Kp Speed Loop**	446	Speed Desired BW**	449		

File	Group	Parameters					
Dynamic Control	Ramp Rates	Accel Time 1, 2	140,141	Decel Time 1, 2	142,143	S Curve %	146
	Load Limits	Current Lmt Sel	147	Drive OL Mode	150	Regen Power Limit**	153
		Current Lmt Val	148	PWM Frequency	151	Current Rate Limit **	154
		Current Lmt Gain	149	Droop RPM @ FLA	152		
	Stop/Brake Modes	Stop/BRK Mode A	155	DC Brake Time	159	DB Resistor Type	163
		Stop/BRK Mode B	156	Bus Reg Ki*	160	Bus Reg Kp*	164
		DC Brk Lvl Sel	157	Bus Reg Mode A	161	Bus Reg Kd*	165
		DC Brake Level	158	Bus Reg Mode B	162	Flux Braking	166
	Restart Modes	Start At PowerUp	168	Auto Rstrt Delay	175	Wake Time	181
		Flying Start En	169	Sleep-Wake Mode	178	Sleep Level	182
		Flying StartGain	170	Sleep-Wake Ref	179	Sleep Time	183
		Auto Rstrt Tries	174	Wake Level	180	Powerup Delay	167
	Power Loss	Power Loss Mode	184	Power Loss Time	185	Power Loss Level	186
Utility	Direction Config	Direction Mode	190				
	HIM Ref Config	Save HIM Ref	192	Man Ref Preload	193		
	MOP Config	Save MOP Ref	194	MOP Rate	195		
	Drive Memory	Param Access Lvl	196	Save To User Set	199	Voltage Class	202
		Reset To Defalts	197	Reset Meters	200	Drive Checksum	203
		Load Frm Usr Set	198	Language	201		
	Diagnostics	Drive Status 1, 2	209,210	Drive Temp	218	Alarm 1,2 @ Fault	229,230
		Drive Alarm 1, 2	211,212	Drive OL Count	219	Testpoint 1 Sel	234
		Speed Ref Source	213	Motor OL Count	220	Testpoint 1 Data	235
		Start Inhibits	214	Fault Speed	224	Testpoint 2 Sel	236
		Last Stop Source	215	Fault Amps	225	Testpoint 2 Data	237
		Dig In Status	216	Fault Bus Volts	226		
		Dig Out Status	217	Status 1,2 @ Fault	227,228		
	Faults	Fault Config 1	238	Fault Clear Mode	241	Fault 1-8 Code	243-257
		Fault Clear	240	Power Up Marker	242	Fault 1-8 Time	244-258
	Alarms	Alarm Config 1	259	Alarm Clear	261	Alarm1-8 Code	262-269
	Scaled Blocks	Scale1, 2 In Value	476,482	Scale1, 2 In Lo	478,484	Scale1,2 Out Lo	480,486
		Scale1, 2 In Hi	477,483	Scale1, 2 Out Hi	479,485	Scale1,2 Out Value	481,487
Communication	Comm Control	DPI Baud Rate	270	Drive Ref Rslt	272	DPI Port Sel	274
		Drive Logic Rslt	271	Drive Ramp Rslt	273	DPI Port Value	275
	Masks & Owners	Logic Mask	276	Fault Clr Mask	283	Reference Owner	292
		Start Mask	277	MOP Mask	284	Accel Owner	293
		Jog Mask	278	Local Mask	285	Decel Owner	294
		Direction Mask	279	Stop Owner	288	Fault Clr Owner	295
		Reference Mask	280	Start Owner	289	MOP Owner	296
		Accel Mask	281	Jog Owner	290	Local Owner	297
		Decel Mask	282	Direction Owner	291		
	Datalinks	Data In A1-D2	300-307	Data Out A1-D2	310-317		
Inputs & Outputs	Analog Inputs	Anlg In Config	320	Analog In1, 2 Hi	322,325	Analog In1, 2 Loss	324,327
		Anlg In Sqr Root	321	Analog In1, 2 Lo	323,326		
	Analog Outputs	Anlg Out Config	340	Analog Out1, 2 Sel	342,345	Analog Out1, 2 Lo	344,347
		Anlg Out Absolut	341	Analog Out1, 2 Hi	343,346		
	Digital Inputs	Digital In1-6 Sel	361-366				
	Digital Outputs	Digital Out1 Sel	380	Digital Out2 Sel	384	Digital Out3 Sel	388
		Dig Out1 Level	381	Dig Out2 Level	385	Dig Out3 Level	389
		Dig Out1 OnTime	382	Dig Out2 OnTime	386	Dig Out3 OnTime	390
		Dig Out1 OffTime	383	Dig Out2 OffTime	387	Dig Out3 OffTime	391

* These parameters will only be displayed when parameter 053 [Motor Cntl Sel] is set to option "2 or 3."

** These parameters will only be displayed when parameter 053 [Motor Cntl Sel] is set to option "4."

Monitor File

File	Group	No.	Parameter Name & Description	Values	Related
MONITOR	Metering	001	**[Output Freq]** Output frequency present at T1, T2 & T3 (U, V & W)	Default: Read Only Min/Max: –/+[Maximum Freq] Units: 0.1 Hz	
		002	Standard **[Commanded Freq]** Value of the active frequency command.	Default: Read Only Min/Max: –/+[Maximum Speed] Units: 0.1 Hz	
			Vector **[Commanded Speed]** Value of the active Speed/Frequency Reference. Displayed in Hz or RPM, depending on value of [Speed Units].	Default: Read Only Min/Max: –/+[Maximum Speed] Units: 0.1 Hz 0.1 RPM	079
		003	**[Output Current]** The total output current present at T1, T2 & T3 (U, V & W).	Default: Read Only Min/Max: 0.0/Drive Rated Amps × 2 Units: 0.1 Amps	
		004	**[Torque Current]** The amount of current that is in phase with the fundamental voltage component.	Default: Read Only Min/Max: Drive Rating × –2/+2 Units: 0.1 Amps	
		005	**[Flux Current]** Amount of current that is out of phase with the fundamental voltage component.	Default: Read Only Min/Max: Drive Rating × –2/+2 Units: 0.1 Amps	
		006	**[Output Voltage]** Output voltage present at terminals T1, T2 & T3 (U, V & W).	Default: Read Only Min/Max: 0.0/Drive Rated Volts Units: 0.1 VAC	
		007	**[Output Power]** Output power present at T1, T2 & T3 (U, V & W).	Default: Read Only Min/Max: 0.0/Drive Rated kW × 2 Units: 0.1 kW	
		008	**[Output Powr Fctr]** Output power factor.	Default: Read Only Min/Max: 0.00/1.00 Units: 0.01	
		009	**[Elapsed MWh]** 32 Accumulated output energy of the drive.	Default: Read Only Min/Max: 0.0/214748364.0 MWh 0.0/429496729.5 MWh Vector Units: 0.1 MWh	
		010	**[Elapsed Run Time]** 32 Accumulated time drive is outputting power.	Default: Read Only Min/Max: 0.0/429496729.5 Hrs 0.0/214748364.0 Hrs Vector Units: 0.1 Hrs	

File	Group	No.	Parameter Name & Description	Values	Related
MONITOR	Metering	011	Standard **[MOP Frequency]** Value of the signal at MOP (Motor Operated Potentiometer).	Default: Read Only Min/Max: –/+[Maximum Freq] Units: 0.1 Hz	079
			Vector **[MOP Reference]** See description above.	Default: Read Only Min/Max: –/+[Maximum Speed] Units: 0.1 Hz 0.1 RPM	
		012	**[DC Bus Voltage]** Present DC bus voltage level.	Default: Read Only Min/Max: 0.0/Based on Drive Rating Units: 0.1 VDC	
		013	**[DC Bus Memory]** 6 minute average of DC bus voltage level.	Default: Read Only Min/Max: 0.0/Based on Drive Rating Units: 0.1 VDC	
		016 017	**[Analog In1 Value]** **[Analog In2 Value]** Value of the signal at the analog inputs.	Default: Read Only Min/Max: 0.000/20.000 mA –/+10.000V Units: 0.001 mA 0.001 Volt	
		022	Vector **[Ramped Speed]** Value of commanded speed after Accel/ Decel, and S-Curve are applied.	Default: Read Only Min/Max: –/+400.0 Hz –/+24000.0 RPM Units: 0.1 Hz 0.1 RPM	079
		023	Vector **[Speed Reference]** Summed value of ramped speed, process PI and droop. When FVC Vector mode is selected, droop will not be added.	Default: Read Only Min/Max: –/+400.0 Hz –/+24000.0 RPM Units: 0.1 Hz 0.1 RPM	079
		024 FV	Vector **[Commanded Torque]** Final torque reference value after limits and filtering are applied. Percent of motor rated torque.	Default: Read Only Min/Max: –/+800.0% Units: 0.1%	053
		025	Vector **[Speed Feedback]** This parameter displays the value of actual motor speed, whether measured by encoder feedback, or estimated.	Default: Read Only Min/Max: –/+400.0 Hz –/+24000.0 RPM Units: 0.1 Hz 0.1 RPM	
	Drive Data	026 32	**[Rated kW]** Drive power rating.	Default: Read Only Min/Max: 0.00/3000.00 kW Units: 0.01 kW	
		027	**[Rated Volts]** The drive input voltage class (208, 240, 400 etc.).	Default: Read Only Min/Max: 0.0/6553.5 VAC 0.0/65535.0 VAC Vector Units: 0.1 VAC	

File	Group	No.	Parameter Name & Description	Values	Related
MONITOR	Drive Data	028	**[Rated Amps]** The drive rated output current.	Default: Read Only Min/Max: 0.0/6553.5 Amps 0.0/65535.0 Amps Vector Units: 0.1 Amps	
		029	**[Control SW Ver]** Main Control Board software version.	Default: Read Only Min/Max: 0.000/256.256 0.000/65535.000 Vector Units: 0.001	196

Motor Control File

File	Group	No.	Parameter Name & Description	Values	Related
MOTOR CONTROL	Motor Data	040	**[Motor Type]** Set to match the type of motor connected. (1) **Important:** Selecting option 1 or 2 also requires selection of "Custom V/Hz," option 2 in parameter 53.	Default: 0 "Induction" Options: 0 "Induction" 1 "Synchr Reluc" (1) 2 "Synchr PM" (1)	053
		041	**[Motor NP Volts]** Set to the motor nameplate rated volts.	Default: Based on Drive Rating Min/Max: 0.0/[Rated Volts] Units: 0.1 VAC	
		042	**[Motor NP FLA]** Set to the motor nameplate rated full load amps.	Default: Based on Drive Rating Min/Max: 0.0/[Rated Amps] × 2 Units: 0.1 Amps	047 048
		043	**[Motor NP Hertz]** Set to the motor nameplate rated frequency.	Default: Based on Drive Cat. No. Min/Max: 5.0/400.0 Hz Units: 0.1 Hz	
		044	**[Motor NP RPM]** Set to the motor nameplate rated RPM.	Default: 1750 RPM 1750.0 RPM Vector Min/Max: 60/2400 RPM 60.0/24000.0 RPM Vector Units: 1 RPM 1.0 RPM Vector	
		045	**[Motor NP Power]** Set to the motor nameplate rated power. 32	Default: Based on Drive Rating Min/Max: 0.00/100.00 Units: 0.00/1000.00 Vector 0.01 kW/HP See [Mtr NP Pwr Units]	046

File	Group	No.	Parameter Name & Description	Values	Related
MOTOR CONTROL	Motor Data	046	**Standard** **[Mtr NP Pwr Units]** Selects the motor power units to be used.	Default: Drive Rating Based Options: 0 "Horsepower" 1 "kiloWatts"	
			Vector **[Mtr NP Pwr Units]** Selects the motor power units to be used. "Convert HP" = converts all power units to Horsepower. "Convert kW" = converts all power units to kilowatts.	Default: Drive Rating Based Options: 0 "Horsepower" 1 "kiloWatts" 2 "Convert HP" 3 "Convert kW"	
		047	**[Motor OL Hertz]** Selects the output frequency below which the motor operating current is derated. The motor thermal overload will generate a fault at lower levels of current.	Default: Motor NP Hz/3 Min/Max: 0.0/Motor NP Hz Units: 0.1 Hz	042 220
		048	**[Motor OL Factor]** Sets the operating level for the motor overload. Motor FLA x OL Factor = Operating Level	Default: 1.0 Min/Max: 0.20/2.00 Units: 0.01	042 220
		049	**Vector** **[Motor Poles]** Defines the number of poles in the motor.	Default: 4 Min/Max: 2/40 Units: 1 Pole	
	Torq Attributes	053	**Standard** **[Torque Perf Mode]** Sets the method of motor torque production.	Default: 0 "Sensrls Vect" Options: 0 "Sensrls Vect" 1 "SV Economize" 2 "Custom V/Hz" 3 "Fan/Pmp V/Hz"	
			Vector **[Motor Cntl Sel]** Sets the method of motor control used in the drive. **Important:** "FVC Vector" mode requires autotuning of the motor, both coupled and uncoupled to the load.	Default: 0 "Sensrls Vect" Options: 0 "Sensrls Vect" 1 "SV Economize" 2 "Custom V/Hz" 3 "Fan/Pmp V/Hz" 4 "FVC Vector"	
		054	**[Maximum Voltage]** Sets the highest voltage the drive will output.	Default: Drive Rated Volts Min/Max: Rated Volts x 0.25/Rated Volts Units: 0.1 VAC	
		055	**[Maximum Freq]** Sets the highest frequency the drive will output. Refer to parameter 083 [Overspeed Limit].	Default: 110.0 or 130.0 Hz Min/Max: 5.0/420.0 Hz Units: 0.1 Hz	083

File	Group	No.	Parameter Name & Description	Values	Related
MOTOR CONTROL	Torq Attributes	056	**[Compensation]** Enables/disables correction options.		
		057	**[Flux Up Mode]** Auto = Flux is established for a calculated time period based on motor nameplate data. [Flux Up Time] is not used. Manual = Flux is established for [Flux Up Time] before acceleration.	Default: 0 "Manual" Options: 0 "Manual" 1 "Automatic"	053 058
		058	**[Flux Up Time]** Sets the amount of time the drive will use to try and achieve full motor stator flux. When a Start command is issued, DC current at current limit level is used to build stator flux before accelerating.	Default: 0.00 Secs Min/Max: 0.00/5.00 Secs Units: 0.01 Secs	053 058
		059	**[SV Boost Filter]** Sets the amount of filtering used to boost voltage during Sensorless Vector and FVC Vector (encoderless) operation.	Default: 500 Min/Max: 0/32767 Units: 1	

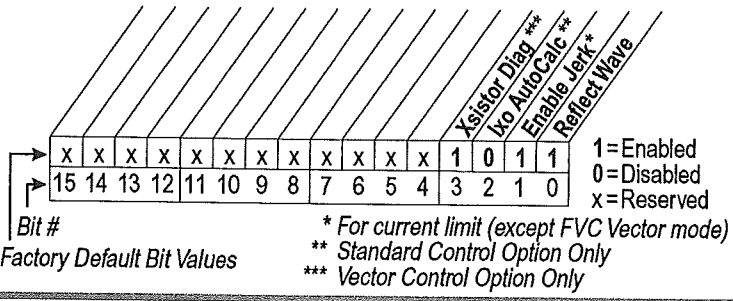

File	Group	No.	Parameter Name & Description	Values	Related
MOTOR CONTROL	Torq Attributes	061	**[Autotune]** Provides a manual or automatic method for setting [IR Voltage Drop], [Flux Current Ref] and [Ixo Voltage Drop]. Valid only when parameter 53 is set to "Sensrls Vect," "SV Economize" or "FVC Vector."	Default: 3 "Calculate" Options: 0 "Ready" 1 "Static Tune" 2 "Rotate Tune" 3 "Calculate"	053 062
			"Ready" (0) = Parameter returns to this setting following a "Static Tune" or "Rotate Tune." It also permits manually setting [IR Voltage Drop], [Ixo Voltage Drop] and [Flux Current Ref]. "Static Tune" (1) = A temporary command that initiates a non-rotational motor stator resistance test for the best possible automatic setting of [IR Voltage Drop] in all valid modes and a non-rotational motor leakage inductance test for the best possible automatic setting of [Ixo Voltage Drop] in "FVC Vector" mode. A start command is required following initiation of this setting. The parameter returns to "Ready" (0) following the test, at which time another start transition is required to operate the drive in normal mode. Used when motor cannot be rotated. "Rotate Tune" (2) = A temporary command that initiates a "Static Tune" followed by a rotational test for the best possible automatic setting of [Flux Current Ref]. In "FVC Vector" mode, with encoder feedback, a test for the best possible automatic setting of [Slip RPM @ FLA] is also run. A start command is required following initiation of this setting. The parameter returns to "Ready" (0) following the test, at which time another start transition is required to operate the drive in normal mode. **Important:** Used when motor is uncoupled from the load. Results may not be valid if a load is coupled to the motor during this procedure. **ATTENTION:** Rotation of the motor in an undesired direction can occur during this procedure. To guard against possible injury and/or equipment damage, it is recommended that the motor be disconnected from the load before proceeding. "Calculate" (3) = This setting uses motor nameplate data to automatically set [IR Voltage Drop], [Ixo Voltage Drop], [Flux Current Ref] and [Slip RPM @ FLA].		
		062	**[IR Voltage Drop]** Value of voltage drop across the resistance of the motor stator at rated motor current. Used only when parameter 53 is set to "Sensrls Vect," "SV Economize" or "FVC Vector."	Default: Based on Drive Rating Min/Max: 0.0/[Motor NP Volts]×0.25 Units: 0.1 VAC	053 061
		063	**[Flux Current Ref]** Value of amps for full motor flux. Used only when parameter 53 is set to "Sensrls Vect," "SV Economize or "FVC Vector."	Default: Based on Drive Rating Min/Max: 0.00/[Motor NP FLA] Units: 0.01 Amps	053 061
		064	**[Ixo Voltage Drop]** Value of voltage drop across the leakage inductance of the motor at rated motor current. Used only when parameter 53 is set to "Sensrls Vect," "SV Economize or "FVC Vector."	Default: Based on Drive Rating Min/Max: 0.0/230.0, 480.0, 575 VAC Units: 0.1 VAC	

File	Group	No.	Parameter Name & Description	Values	Related
MOTOR CONTROL	Torq Attributes	066	**Vector [Autotune Torque]** Specifies motor torque applied to the motor during the flux current and inertia tests performed during an autotune.	Default: 50.0% Min/Max: 0.0/150.0% Units: 0.1%	053
		067	**Vector [Inertia Autotune]** Provides an automatic method of setting [Total Inertia]. This test is automatically run during Start-Up motor tests. **Important:** Use when motor is coupled to the load. Results may not be valid if the load is not coupled to the motor during this procedure. "Ready" = Parameter returns to this setting following a completed inertia tune. "Inertia Tune" = A temporary command that initiates an inertia test of the motor/load combination. The motor will ramp up and down, while the drive measures the amount of inertia.	Default: 0 "Ready" Options: 0 "Ready" 1 "Inertia Tune"	053 450
		427 431	**Vector [Torque Ref A Sel]** **Vector [Torque Ref B Sel]** Selects the source of the external torque reference to the drive. How this reference is used is dependent upon [Speed/Torque Mod]. (1) See *Appendix B* for DPI port locations.	Default: 1 "Analog In 1" 1 "Analog In 1" Options: 0 "Torque Setpt" 1 "Analog In 1" 2 "Analog In 2" 3-17 "Reserved" 18-22 "DPI Port 1-5"(1) 23 "Reserved" 24 "Disabled"	053
		428 432	**Vector [Torque Ref A Hi]** **Vector [Torque Ref B Hi]** Scales the upper value of the [Torque Ref A Sel] selection when the source is an analog input.	Default: 100.0% 100.0% Min/Max: –/+800.0% Units: 0.1%	053
		429 433	**Vector [Torque Ref A Lo]** **Vector [Torque Ref B Lo]** Scales the lower value of the [Torque Ref A Sel] selection when the source is an analog input.	Default: 0.0% 0.0% Min/Max: –/+800.0% Units: 0.1%	053
		430	**Vector [Torq Ref A Div]** Defines the value of the divisor for the [Torque Ref A Sel] selection.	Default: 1.0 Min/Max: 0.1/3276.7 Units: 0.1	053
		434	**Vector [Torque Ref B Mult]** Defines the value of the multiplier for the [Torque Ref B Sel] selection.	Default: 1.0 Min/Max: –/+32767.0 Units: 0.1	053
		435	**Vector [Torque Setpoint]** Provides an internal fixed value for Torque Setpoint when [Torque Ref Sel] is set to "Torque Setpt."	Default: 0.0% Min/Max: –/+800.0% Units: 0.1%	053

File	Group	No.	Parameter Name & Description	Values	Related
MOTOR CONTROL	Torq Attributes	436	**Vector** **[Pos Torque Limit]** Defines the torque limit for the positive torque reference value. The reference will not be allowed to exceed this value.	Default: 200.0% Min/Max: 0.0/800.0% Units: 0.1%	053
		437	**Vector** **[Neg Torque Limit]** Defines the torque limit for the negative torque reference value. The reference will not be allowed to exceed this value.	Default: –200.0% Min/Max: –800.0/0.0% Units: 0.1%	053
		440	**Vector** **[Control Status]** Displays a summary status of any condition that may be limiting either the current or the torque reference.	Read Only	053
		441	**Vector** **[Mtr Tor Cur Ref]** Displays the torque current reference value that is present at the output of the current rate limiter (parameter 154).	Default: Read Only Min/Max: –/+800.00 Amps Units: 0.01 Amps	053
	Volts per Hertz	069	**[Start/Acc Boost]** Sets the voltage boost level for starting and acceleration when "Custom V/Hz" mode is selected. Refer to parameter 083 [Overspeed Limit].	Default: Based on Drive Rating Min/Max: 0.0/[Motor NP Volts] × 0.25 Units: 0.1 VAC	053 070
		070	**[Run Boost]** Sets the boost level for steady state or deceleration when "Fan/Pmp V/Hz" or "Custom V/Hz" modes are selected. See parameter 083 [Overspeed Limit].	Default: Based on Drive Rating Min/Max: 0.0/[Motor NP Volts] × 0.25 Units: 0.1 VAC	053 069
		071	**[Break Voltage]** Sets the voltage the drive will output at [Break Frequency]. Refer to parameter 083 [Overspeed Limit].	Default: [Motor NP Volts] × 0.25 Min/Max: 0.0/[Motor NP Volts] Units: 0.1 VAC	053 072
		072	**[Break Frequency]** Sets the frequency the drive will output at [Break Voltage]. Refer to parameter 083.	Default: [Motor NP Hz] × 0.25 Min/Max: 0.0/[Maximum Freq] Units: 0.1 Hz	053 071

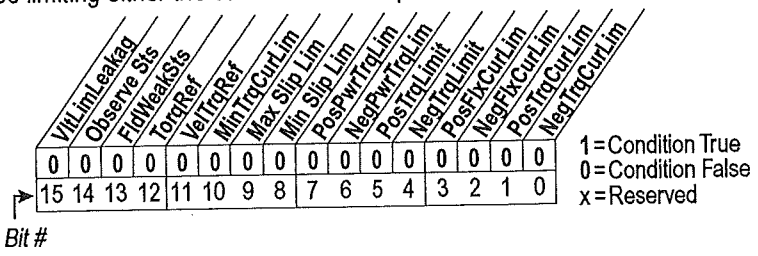

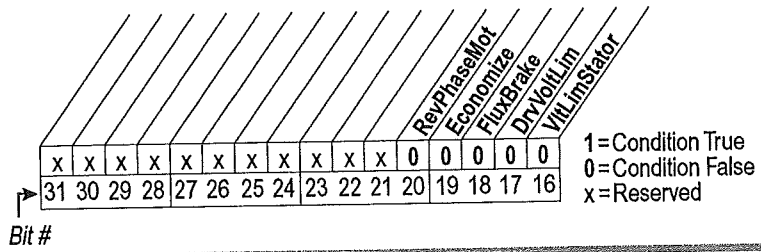

File	Group	No.	Parameter Name & Description	Values	Related
MOTOR CONTROL	Speed Feedback	412	Vector **[Motor Fdbk Type]** Selects the encoder type; single channel or quadrature. Options 1 & 3 detect a loss of encoder signal (when using differential inputs) regardless of the [Feedback Select], param. 080 setting.	Default: 0 "Quadrature" Options: 0 "Quadrature" 1 "Quad Check" 2 "Single Chan" 3 "Single Check"	
		413	Vector **[Encoder PPR]** Contains the encoder pulses per revolution.	Default: 1024 PPR Min/Max: 2/20000 PPR Units: 1 PPR	
		414	Vector **[Enc Position Fdbk]** Displays raw encoder pulse count. For single channel encoders, this count will increase (per rev.) by the amount in [Encoder PPR]. For quadrature encoders this count will increase by 4 times the amount defined in [Encoder PPR].	Default: Read Only Min/Max: –/+2147483647 Units: 1	
		415	Vector **[Encoder Speed]** Provides a monitoring point that reflects speed as seen from the feedback device.	Default: Read Only Min/Max: –/+420.0 Hz –/+25200.0 RPM Units: 0.1 Hz 0.1 RPM	079
		416	Vector **[Fdbk Filter Sel]** Selects the type of feedback filter desired. "Light" uses a 35/49 radian feedback filter. "Heavy" uses a 20/40 radian feedback filter.	Default: 0 "None" Options: 0 "None" 1 "Light" 2 "Heavy"	
		419	Vector **[Notch Filter Freq]** FV Sets the center frequency for an optional 2-pole notch filter. Filter is applied to the torque command. "0" disables this filter.	Default: 0.0 Hz Min/Max: 0.0/500.0 Hz Units: 0.1 Hz	053
		420	Vector **[Notch Filter K]** FV Sets the gain for the 2-pole notch filter.	Default: 0.3 Hz Min/Max: 0.1/0.9 Hz Units: 0.1 Hz	053
		421	Vector **[Marker Pulse]** Reflects the raw encoder count at the last marker pulse.	Default: Read Only Min/Max: –/+2147483647 Units: 1	
		422	Vector **[Pulse In Scale]** Sets the scale factor/gain for the Pulse Input when P423 is set to "Pulse Input."	Default: 64 Min/Max: 2/20000 Units: 1	
		423	Vector **[Encoder Z Chan]** Defines if the input wired to terminals 5 & 6 of the Encoder Terminal Block will be used as a Pulse or Marker input.	Default: 0 "Pulse Input" Options: 0 "Pulse Input" 1 "Pulse Check" 2 "Marker Input" 3 "Marker Check"	

Speed Command File

File	Group	No.	Parameter Name & Description	Values	Related
SPEED COMMAND	Spd Mode & Limits	079	**Vector** **[Speed Units]** Selects the units to be used for all speed related parameters. Options 0 & 1 indicate status only. Options 3 & 4 will convert/configure the drive for that selection. "Convert Hz" (2) - converts all speed based parameters to Hz, and changes the value proportionately (i.e. 1800 RPM = 60 Hz). "Convert RPM" (3) - converts all speed based parameters to RPM, and changes the value proportionately.	Default: 0 "Hz" Options: 0 "Hz" 1 "RPM" 2 "Convert Hz" 3 "Convert RPM"	
		080	**Standard** **[Speed Mode]** Sets the method of speed regulation.	Default: 0 "Open Loop" Options: 0 "Open Loop" 1 "Slip Comp" 2 "Process PI"	412 152
			Vector **[Feedback Select]** Selects the source for motor speed feedback. "Open Loop" (0) - no encoder is present, and slip compensation is not needed. "Slip Comp" (1) - tight speed control is needed, and encoder is not present. "Encoder" (3) - an encoder is present. "Simulator" (5) - Simulates a motor for testing drive operation and interface checkout.	Default: 0 "Open Loop" Options: 0 "Open Loop" 1 "Slip Comp" 2 "Reserved" 3 "Encoder" 4 "Reserved" 5 "Simulator"	
		081	**[Minimum Speed]** Sets the low limit for speed reference after scaling is applied. Refer to parameter 083 [Overspeed Limit].	Default: 0.0 Min/Max: 0.0/[Maximum Speed] Units: 0.1 Hz 0.1 RPM Vector	079 083 092 095
		082	**[Maximum Speed]** Sets the high limit for speed reference after scaling is applied. Refer to parameter 083 [Overspeed Limit].	Default: 50.0 or 60.0 Hz (volt class) [Motor NP RPM] Min/Max: 5.0/400.0 Hz 75.0/24000.0 RPM Vector Units: 0.1 Hz 0.1 RPM Vector	055 079 083 091 094 202

File	Group	No.	Parameter Name & Description	Values	Related
SPEED COMMAND	Spd Mode & Limits	083	**[Overspeed Limit]** Sets the incremental amount of the output frequency (above [Maximum Speed]) allowable for functions such as slip compensation. [Maximum Speed] + [Overspeed Limit] must be ≤ [Maximum Freq]	Default: 10.0 Hz 300.0 RPM Vector Min/Max: 0.0/20.0 Hz 0.0/600.0 RPM Vector Units: 0.1 Hz 0.1 RPM Vector	055 079 082
		084 085 086	**[Skip Frequency 1]** **[Skip Frequency 2]** **[Skip Frequency 3]** Sets a frequency at which the drive will not operate. [Skip Frequency 1-3] and [Skip Frequency Band] must not equal 0.	Default: 0.0 Hz Default: 0.0 Hz Default: 0.0 Hz Min/Max: –/+[Maximum Speed] Units: 0.1 Hz	087
		087	**[Skip Freq Band]** Determines the bandwidth around a skip frequency. [Skip Freq Band] is split, applying 1/2 above and 1/2 below the actual skip frequency. The same bandwidth applies to all skip frequencies.	Default: 0.0 Hz Min/Max: 0.0/30.0 Hz Units: 0.1 Hz	084 085 086
		088	Vector **[Speed/Torque Mod]** Selects the torque reference source. "Zero Torque" (0) - torque command = 0. "Speed Reg" (1) - drive operates as a speed regulator. "Torque Reg" (2) - an external torque reference is used for the torque command. "Min Torq/Spd" (3) - selects the smallest algebraic value to regulate to when the torque reference and torque generated from the speed regulator are compared. "Max Torq/Spd" (4) - selects the largest algebraic value when the torque reference and the torque generated from the speed regulator are compared. "Sum Torq/Spd" (5) - selects the sum of the torque reference and the torque generated from the speed regulator. "Absolute" (6) - selects the smallest absolute algebraic value to regulate to when the torque reference and torque generated from the speed regulator are compared.	Default: 1 "Speed Reg" Options: 0 "Zero Torque" 1 "Speed Reg" 2 "Torque Reg" 3 "Min Torq/Spd" 4 "Max Torq/Spd" 5 "Sum Torq/Spd" 6 "Absolute Min"	053

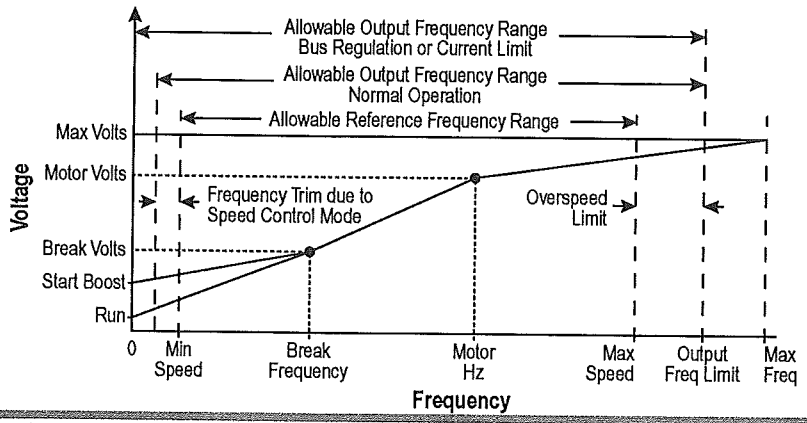

File	Group	No.	Parameter Name & Description	Values	Related
SPEED COMMAND	Spd Mode & Limits	454 FV	**Vector [Rev Speed Limit]** Sets a limit on speed in the negative direction, when in FVC Vector mode. Used in bipolar mode only. A value of zero disables this parameter and uses [Min Speed] for minimum speed.	Default: 0.0 RPM Min/Max: –[Max Speed]/0.0 Hz –[Max Speed]/0.0 RPM Units: 0.0 Hz 0.0 RPM	
	Speed Reference	090	**[Speed Ref A Sel]** Selects the source of the speed reference to the drive unless [Speed Ref B Sel] or [Preset Speed 1-7] is selected. (1) See Appendix B for DPI port locations.	Default: 2 "Analog In 2" Options: 1 "Analog In 1" 2 "Analog In 2" 3-6 "Reserved" 7 "Pulse In" 8 "Encoder" 9 "MOP Level" 10 "Reserved" 11 "Preset Spd1" 12 "Preset Spd2" 13 "Preset Spd3" 14 "Preset Spd4" 15 "Preset Spd5" 16 "Preset Spd6" 17 "Preset Spd7" 18 "DPI Port 1"(1) 19 "DPI Port 2"(1) 20 "DPI Port 3"(1) 21 "DPI Port 4"(1) 22 "DPI Port 5"(1)	002 091 thru 093 101 thru 107 117 thru 120 192 thru 194 213 272 273 320 361 thru 366
		091	**[Speed Ref A Hi]** Scales the upper value of the [Speed Ref A Sel] selection when the source is an analog input.	Default: [Maximum Speed] Min/Max: –/+[Maximum Speed] Units: 0.1 Hz 0.01 RPM Vector	079 082
		092	**[Speed Ref A Lo]** Scales the lower value of the [Speed Ref A Sel] selection when the source is an analog input.	Default: 0.0 Min/Max: –/+[Maximum Speed] Units: 0.1 Hz 0.01 RPM Vector	079 081
		093	**[Speed Ref B Sel]** See [Speed Ref A Sel].	Default: 11 "Preset Spd1" Options: See [Speed Ref A Sel]	See 090
		094	**[Speed Ref B Hi]** Scales the upper value of the [Speed Ref B Sel] selection when the source is an analog input.	Default: [Maximum Speed] Min/Max: –/+[Maximum Speed] Units: 0.1 Hz 0.01 RPM Vector	079 093
		095	**[Speed Ref B Lo]** Scales the lower value of the [Speed Ref B Sel] selection when the source is an analog input.	Default: 0.0 Min/Max: –/+[Maximum Speed] Units: 0.1 Hz 0.01 RPM Vector	079 090 093

File	Group	No.	Parameter Name & Description	Values	Related
SPEED COMMAND	Speed Reference	096	**[TB Man Ref Sel]** Sets the manual speed reference source when a digital input is configured for "Auto/Manual." (1) "Analog In 2" is not a valid selection if it was selected for any of the following: - [Trim In Select] - [PI Feedback Sel] - [PI Reference Sel] - [Current Lmt Sel] - [Sleep-Wake Ref]	Default: 1 "Analog In 1" Options: 1 "Analog In 1" 2 "Analog In 2" (1) 3-8 "Reserved" 9 "MOP Level"	097 098
		097	**[TB Man Ref Hi]** Scales the upper value of the [TB Man Ref Sel] selection when the source is an analog input.	Default: [Maximum Speed] Min/Max: –/+[Maximum Speed] Units: 0.1 Hz 0.01 RPM Vector	079 096
		098	**[TB Man Ref Lo]** Scales the lower value of the [TB Man Ref Sel] selection when the source is an analog input.	Default: 0.0 Min/Max: –/+[Maximum Speed] Units: 0.1 Hz 0.01 RPM Vector	079 096
		099	Vector **[Pulse Input Ref]** Displays the pulse input value as seen at terminals 5 and 6 of the Encoder Terminal Block, if [Encoder Z Chan], parameter 423 is set to "Pulse Input."	Default: Read Only Min/Max: –/+420.0 Hz –/+25200.0 RPM Units: 0.1 Hz 0.1 RPM	
	Discrete Speeds	100	Standard **[Jog Speed]** Sets the output frequency when a jog command is issued.	Default: 10.0 Hz Min/Max: –/+[Maximum Speed] Units: 0.1 Hz	079
			Vector **[Jog Speed 1]** Sets the output frequency when Jog Speed 1 is selected.	Default: 10.0 Hz 300.0 RPM Min/Max: –/+[Maximum Speed] Units: 0.1 Hz 1 RPM	
		101 102 103 104 105 106 107	**[Preset Speed 1]** **[Preset Speed 2]** **[Preset Speed 3]** **[Preset Speed 4]** **[Preset Speed 5]** **[Preset Speed 6]** **[Preset Speed 7]** Provides an internal fixed speed command value. In bipolar mode direction is commanded by the sign of the reference.	Default: 5.0 Hz/150 RPM Vector 10.0 Hz/300 RPM Vector 20.0 Hz/600 RPM Vector 30.0 Hz/900 RPM Vector 40.0 Hz/1200 RPM Vector 50.0 Hz/1500 RPM Vector 60.0 Hz/1800 RPM Vector Min/Max: –/+[Maximum Speed] Units: 0.1 Hz 1 RPM Vector	079 090 093
		108	Vector **[Jog Speed 2]** Sets the output frequency when Jog Speed 2 is selected.	Default: 10.0 Hz 300.0 RPM Min/Max: –/+[Maximum Speed] Units: 0.1 Hz 1 RPM	

File	Group	No.	Parameter Name & Description	Values	Related
SPEED COMMAND	Speed Trim	117	**[Trim In Select]** Specifies which analog input signal is being used as a trim input.	Default: 2 "Analog In 2" Options: See [Speed Ref A Sel]	090 093
		118	**[Trim Out Select]** Specifies which speed references are to be trimmed. Bit # 15 14 13 12 11 10 9 8 7 6 5 4 3 2 1 0 Factory Default Bit Values: x x x x x x x x x x x x x x 0 0 Trim Ref B, Trim Ref A 1 = Trimmed 0 = Not Trimmed x = Reserved	117 119 120
		119	**[Trim Hi]** Scales the upper value of the [Trim In Select] selection when the source is an analog input.	Default: 60.0 Hz Min/Max: –/+[Maximum Speed] Units: 0.1 Hz 1 RPM Vector	079 082 117
		120	**[Trim Lo]** Scales the lower value of the [Trim In Select] selection when the source is an analog input.	Default: 0.0 Hz Min/Max: –/+[Maximum Speed] Units: 0.1 Hz 1 RPM Vector	079 117
	Slip Comp		**Important:** Parameters in the Slip Comp Group are used to enable and tune the Slip Compensation Regulator. In order to allow the Slip Compensation Regulator to control drive operation, parameter 080 [Speed Mode] must be set to 1 "Slip Comp".		
		121	**[Slip RPM @ FLA]** Sets the amount of compensation to drive output at motor FLA. If the value of parameter 061 [Autotune] = 3 "Calculate" changes made to this parameter will not be accepted. Value may be changed by [Autotune] when "Encoder" is selected in [Feedback Select], parameter 080.	Default: Based on [Motor NP RPM] Min/Max: 0.0/1200.0 RPM Units: 0.1 RPM	061 080 122 123
		122	**[Slip Comp Gain]** Sets the response time of slip compensation.	Default: 40.0 Min/Max: 1.0/100.0 Units: 0.1	080 121 122
		123	**[Slip RPM Meter]** Displays the present amount of adjustment being applied as slip compensation.	Default: Read Only Min/Max: 0.0/300.0 RPM Units: 0.1 RPM	080 121 122

File	Group	No.	Parameter Name & Description	Values	Related
SPEED COMMAND	Process PI		**Important:** Standard Control Option Only – Parameters in the Process PI Group are used to enable and tune the PI Loop. In order to allow the PI Loop to control drive operation, parameter 080 [Speed Mode] must be set to 2 "Process PI".		
		124	**[PI Configuration]** Sets configuration of the PI regulator.		124 thru 138

Bit #	15	14	13	12	11	10	9	8	7	6	5	4	3	2	1	0
	x	x	x	x	x	x	0	0	0	0	0	0	0	0	0	0
Factory Default Bit Values									Torque Trim *	Anti-Wind Up	Stop Mode	Feedbak Sqrt	Zero Clamp	Ramp Ref	Preload Mode	Invert Error	Excl Mode

1 = Enabled
0 = Disabled
x = Reserved

* Vector Control Option Only

		125	**[PI Control]** Controls the PI regulator.		080

Bit #	15	14	13	12	11	10	9	8	7	6	5	4	3	2	1	0
	x	x	x	x	x	x	x	x	x	x	x	x	x	0	0	0
Factory Default Bit Values														PI Reset	PI Hold	PI Enable

1 = Enabled
0 = Disabled
x = Reserved

		126	**[PI Reference Sel]** Selects the source of the PI reference.	Default: 0 "PI Setpoint" Options: 0 "PI Setpoint" 1 "Analog In 1" 2 "Analog In 2" 3-6 "Reserved" 7 "Pulse In" 8 "Encoder" 9 "MOP Level" 10 "Master Ref" 11-17 "Preset Spd1-7" 18-22 "DPI Port 1-5"	124 thru 138
		127	**[PI Setpoint]** Provides an internal fixed value for process setpoint when [PI Reference Sel] is set to "PI Setpoint."	Default: 50.00% Min/Max: –/+100.00% of Maximum Process Value Units: 0.01%	124 thru 138
		128	**[PI Feedback Sel]** Selects the source of the PI feedback.	Default: 2 "Analog In 2" Options: See [PI Reference Sel].	124 thru 138

File	Group	No.	Parameter Name & Description	Values	Related
SPEED COMMAND	Process PI	129	**[PI Integral Time]** Time required for the integral component to reach 100% of [PI Error Meter]. Not functional when the PI Hold bit of [PI Control] = "1" (enabled).	Default: 2.0 Secs Min/Max: 0.00/100.00 Secs Units: 0.01 Secs	124 thru 138
		130	**[PI Prop Gain]** Sets the value for the PI proportional component. PI Error x PI Prop Gain = PI Output	Default: 1.0 Min/Max: 0.00/100.00 Units: 0.01	124 thru 138
		131	**[PI Lower Limit]** Sets the lower limit of the PI output.	Default: –[Maximum Freq] 100% Vector Min/Max: –/+400.0 Hz –/+800.0% Vector Units: 0.1 Hz 0.1% Vector	079 124 thru 138
		132	**[PI Upper Limit]** Sets the upper limit of the PI output.	Default: +[Maximum Freq] 100% Vector Min/Max: –/+400.0 Hz –/+800.0% Vector Units: 0.1 Hz 0.1% Vector	079 124 thru 138
		133	**[PI Preload]** Sets the value used to preload the integral component on start or enable.	Default: 0.0 Hz 100% Vector Min/Max: –/+400.0 Hz –/+800.0% Vector Units: 0.1 Hz 0.1% Vector	079 124 thru 138
		134	**[PI Status]** Status of the Process PI regulator. PI InLimit, PI Reset, PI Hold, PI Enabled x x x x x x x x x x x x 0 0 0 0 15 14 13 12 11 10 9 8 7 6 5 4 3 2 1 0 Bit # 1 = Condition True 0 = Condition False x = Reserved	Read Only	124 thru 138
		135	**[PI Ref Meter]** Present value of the PI reference signal.	Default: Read Only Min/Max: –/+100.0% Units: 0.1%	124 thru 138
		136	**[PI Fdback Meter]** Present value of the PI feedback signal.	Default: Read Only Min/Max: –/+100.0% Units: 0.1%	124 thru 138
		137	**[PI Error Meter]** Present value of the PI error.	Default: Read Only Min/Max: –/+100.0% Units: 0.1%	124 thru 138

File	Group	No.	Parameter Name & Description	Values	Related
SPEED COMMAND	Process PI	138	**[PI Output Meter]** Present value of the PI output.	Default: Read Only Min/Max: –/+100.0 Hz –/+100.0% Vector Units: 0.1 Hz 0.1% Vector	124 thru 138
		460	Vector **[PI Reference Hi]** Scales the upper value of [PI Reference Sel] of the source.	Default: 100.0% Min/Max: –/+100.0% Units: 0.1%	
		461	Vector **[PI Reference Lo]** Scales the lower value of [PI Reference Sel] of the source.	Default: –100.0% Min/Max: –/+100.0% Units: 0.1%	
		462	Vector **[PI Feedback Hi]** Scales the upper value of [PI Feedback] of the source.	Default: 100.0% Min/Max: –/+100.0% Units: 0.1%	
		463	Vector **[PI Feedback Lo]** Scales the lower value of [PI Feedback] of the source.	Default: 0.0% Min/Max: –/+100.0% Units: 0.1%	
	Speed Regulator	445	Vector **[Ki Speed Loop]** FV Controls the integral error gain of the speed regulator. The drive automatically adjusts [Ki Speed Loop] when a non-zero value is entered for [Speed Desired BW] or an autotune is performed. Typically, manual adjustment of this parameter is needed only if system inertia cannot be determined through an autotune. [Speed Desired BW] is set to "0" when a manual adjustment is made to this parameter.	Default: 50.0 Min/Max: 0.0/4000.0 Units: 0.1	053
		446	Vector **[Kp Speed Loop]** FV Controls the proportional error gain of the speed regulator. The drive automatically adjusts [Kp Speed Loop] when a non-zero value is entered for [Speed Desired BW] or an auto-tune is performed. Typically, manual adjustment of this parameter is needed only if system inertia cannot be determined through an autotune. [Speed Desired BW] is set to "0" when a manual adjustment is made to this parameter.	Default: 20.0 Min/Max: 0.0/200.0 Units: 0.1	053
		447	Vector **[Kf Speed Loop]** FV Controls the feed forward gain of the speed regulator. Setting the Kf gain greater than zero reduces speed feedback overshoot in response to a step change in speed reference.	Default: 0.0 Min/Max: 0.0/0.5 Units: 0.1	053

File	Group	No.	Parameter Name & Description	Values	Related
SPEED COMMAND	Speed Regulator	449 FV	**Vector [Speed Desired BW]** Sets the speed loop bandwidth and determines the dynamic behavior of the speed loop. As bandwidth increases, the speed loop becomes more responsive and can track a faster changing speed reference. Adjusting this parameter will cause the drive to calculate and change [Ki Speed Loop] and [Kp Speed Loop] gains.	Default: 5.0 Radians/Sec Min/Max: 0.0/250.0 Radians/Sec Units: 0.1 Radians/Sec	053
		450 FV	**Vector [Total Inertia]** Represents the time in seconds, for a motor coupled to a load to accelerate from zero to base speed, at rated motor torque. The drive calculates Total Inertia during the autotune inertia procedure. Adjusting this parameter will cause the drive to calculate and change [Ki Speed Loop] and [Kp Speed Loop] gains.	Default: 1.25 Secs Min/Max: 0.1/600.0 Secs Units: 0.1 Secs	053

Dynamic Control File

File	Group	No.	Parameter Name & Description	Values	Related
DYNAMIC CONTROL	Ramp Rates	140 141	**[Accel Time 1]** **[Accel Time 2]** Sets the rate of accel for all speed increases. $\frac{\text{Max Speed}}{\text{Accel Time}}$ = Accel Rate	Default: 10.0 Secs 10.0 Secs Min/Max: 0.1/3600.0 Secs Units: 0.1 Secs	142 143 146 361 thru 366
		142 143	**[Decel Time 1]** **[Decel Time 2]** Sets the rate of decel for all speed decreases. $\frac{\text{Max Speed}}{\text{Decel Time}}$ = Decel Rate	Default: 10.0 Secs 10.0 Secs Min/Max: 0.1/3600.0 Secs Units: 0.1 Secs	140 141 146 361 thru 366
		146	**[S Curve %]** Sets the percentage of accel or decel time that is applied to the ramp as S Curve. Time is added, 1/2 at the beginning and 1/2 at the end of the ramp.	Default: 0% Min/Max: 0/100% Units: 1%	140 thru 143

File	Group	No.	Parameter Name & Description	Values	Related
DYNAMIC CONTROL	Load Limits	147	**[Current Lmt Sel]** Selects the source for the adjustment of current limit (i.e. parameter, analog input, etc.).	Default: 0 "Cur Lim Val" Options: 0 "Cur Lim Val" 1 "Analog In 1" 2 "Analog In 2"	146 149
		148	**[Current Lmt Val]** Defines the current limit value when [Current Lmt Sel] = "Cur Lim Val."	Default: [Rated Amps] × 1.5 (Equation yields approximate default value.) Min/Max: Based on Drive Rating Units: 0.1 Amps	147 149
		149	**[Current Lmt Gain]** Sets the responsiveness of the current limit.	Default: 250 Min/Max: 0/5000 Units: 1	147 148
		150	**[Drive OL Mode]** Selects the drive's response to increasing drive temperature.	Default: 3 "Both–PWM 1st" Options: 0 "Disabled" 1 "Reduce CLim" 2 "Reduce PWM" 3 "Both–PWM 1st"	219
		151	**[PWM Frequency]** Sets the carrier frequency for the PWM output. Drive derating may occur at higher carrier frequencies. For derating information, refer to the *PowerFlex Reference Manual.* **Important:** When parameter 053 [Motor Cntl Sel] is set to "FVC Vector," the drive will run at 2 kHz when operating below 6 Hz. Selecting "Slip Comp," parameter 080 in conjunction with parameter 152 may produce undesirable results.	Default: 4 kHz Min/Max: 2/10 kHz Units: 1 kHz	
		152	Vector **[Droop RPM @ FLA]** Selects amount of droop that the speed reference is reduced when at full load torque. Zero disables the droop function.	Default: 0.0 RPM Min/Max: 0.0/200.0 RPM Units: 0.1 RPM	
		153	Vector **[Regen Power Limit]** FV Sets the maximum power limit allowed to transfer from the motor to the DC bus. When using an external dynamic brake, set this parameter to its maximum value.	Default: –50.0% Min/Max: –800.0/0.0% Units: 0.1%	053
		154	Vector **[Current Rate Limit]** FV Sets the largest allowable rate of change for the current reference signal. This number is scaled in percent of maximum motor current every 250 microseconds.	Default: 400.0% Min/Max: 1.0/800.0% Units: 0.1%	053

File	Group	No.	Parameter Name & Description	Values	Related
DYNAMIC CONTROL	Stop/Brake Modes	155 156	Standard **[Stop Mode A]** Standard **[Stop Mode B]** Active stop mode. [Stop Mode A] is active unless [Stop Mode B] is selected by inputs. (1) When using options 1 or 2, refer to the Attention statements at [DC Brake Level].	Default: 1 "Ramp" Default: 0 "Coast" Options: 0 "Coast" 1 "Ramp"(1) 2 "Ramp to Hold"(1) 3 "DC Brake"	157 158 159
			Vector **[Stop/Brk Mode A]** Vector **[Stop/Brk Mode B]** See description above.		
		157	**[DC Brake Lvl Sel]** Selects the source for [DC Brake Level].	Default: 0 "DC Brake Lvl" Options: 0 "DC Brake Lvl" 1 "Analog In 1" 2 "Analog In 2"	155 156 158 159
		158	**[DC Brake Level]** Defines the DC brake current level injected into the motor when "DC Brake" is selected as a stop mode. The DC braking voltage used in this function is created by a PWM algorithm and may not generate the smooth holding force needed for some applications. Refer to the *PowerFlex Reference Manual.*	Default: [Rated Amps] Min/Max: 0/[Rated Amps] × 1.5 (Equation yields approximate maximum value.) Units: 0.1 Amps	
			ATTENTION: If a hazard of injury due to movement of equipment or material exists, an auxiliary mechanical braking device must be used. **ATTENTION:** This feature should not be used with synchronous or permanent magnet motors. Motors may be demagnetized during braking.		
		159	**[DC Brake Time]** Sets the amount of time DC brake current is "injected" into the motor.	Default: 0.0 Secs Min/Max: 0.0/90.0 Secs Units: 0.1 Secs	155 thru 158
		160	**[Bus Reg Ki]** Sets the responsiveness of the bus regulator.	Default: 450 Min/Max: 0/5000 Units: 1	161 162

File	Group	No.	Parameter Name & Description	Values	Related
DYNAMIC CONTROL	Stop/Brake Modes	161 162	**[Bus Reg Mode A]** **[Bus Reg Mode B]** Sets the method and sequence of the DC bus regulator voltage. Choices are dynamic brake, frequency adjust or both. Sequence is determined by programming or digital input to the terminal block. Dynamic Brake Setup If a dynamic brake resistor is connected to the drive, both of these parameters must be set to either option 2, 3 or 4. Refer to the Attention statement on page P-4 for important information on bus regulation. **ATTENTION:** The drive does not offer protection for externally mounted brake resistors. A risk of fire exists if external braking resistors are not protected. External resistor packages must be self-protected from over temperature or the protective circuit shown in Figure C.2 on page C-7 (or equivalent) must be supplied.	Default: 1 "Adjust Freq" 4 "Both-Frq 1st" Options: 0 "Disabled" 1 "Adjust Freq" 2 "Dynamic Brak" 3 "Both-DB 1st" 4 "Both-Frq 1st"	160 163
		163	**[DB Resistor Type]** Selects whether the internal or an external DB resistor will be used. If a dynamic brake resistor is connected to the drive, [Bus Reg Mode A & B] must be set to either option 2, 3 or 4. **ATTENTION:** Equipment damage may result if a drive mounted (internal) resistor is installed and this parameter is set to "External Res" or "None." Thermal protection for the internal resistor will be disabled, resulting in possible device damage. Also see ATTENTION above.	Default: 0 "Internal Res" 2 "None" Vector Options: 0 "Internal Res" 1 "External Res" 2 "None"	161 162
		164	**[Bus Reg Kp]** Proportional gain for the bus regulator. Used to adjust regulator response.	Default: 1500 Min/Max: 0/10000 Units: 1	
		165	**[Bus Reg Kd]** Derivative gain for the bus regulator. Used to control regulator overshoot.	Default: 1000 Min/Max: 0/10000 Units: 1	
		166	Vector **[Flux Braking]** Set to use an increase in the motor flux current to increase the motor losses, and allow a faster deceleration time when a chopper brake or regenerative capability is not available. Can be used as a stopping or fast deceleration method.	Default: 0 "Disabled" Options: 0 "Disabled" 1 "Enabled"	

File	Group	No.	Parameter Name & Description	Values	Related
DYNAMIC CONTROL	Restart Modes	167	**Vector** **[Powerup Delay]** Defines the programmed delay time, in seconds, before a start command is accepted after a power up.	Default: 0.0 Secs Min/Max: 0.0/30.0 Secs Units: 0.1 Secs	
		168	**[Start At PowerUp]** Enables/disables a feature to issue a Start or Run command and automatically resume running at commanded speed after drive input power is restored. Requires a digital input configured for Run or Start and a valid start contact. **ATTENTION:** Equipment damage and/or personal injury may result if this parameter is used in an inappropriate application. Do not use this function without considering applicable local, national and international codes, standards, regulations or industry guidelines.	Default: 0 "Disabled" Options: 0 "Disabled" 1 "Enabled"	
		169	**[Flying Start En]** Enables/disables the function which reconnects to a spinning motor at actual RPM when a start command is issued. Not required in FVC Vector mode when using an encoder.	Default: 0 "Disabled" Options: 0 "Disabled" 1 "Enabled"	170
		170	**[Flying StartGain]** Sets the response of the flying start function.	Default: 4000 Min/Max: 20/32767 Units: 1	169
		174	**[Auto Rstrt Tries]** Sets the maximum number of times the drive attempts to reset a fault and restart. **ATTENTION:** Equipment damage and/or personal injury may result if this parameter is used in an inappropriate application. Do Not use this function without considering applicable local, national and international codes, standards, regulations or industry guidelines.	Default: 0 Min/Max: 0/9 Units: 1	175
		175	**[Auto Rstrt Delay]** Sets the time between restart attempts when [Auto Rstrt Tries] is set to a value other than zero.	Default: 1.0 Secs Min/Max: 0.5/30.0 Secs Units: 0.1 Secs	174

File	Group	No.	Parameter Name & Description	Values	Related
DYNAMIC CONTROL	Restart Modes	178	**[Sleep-Wake Mode]** Enables/disables the Sleep/Wake function. **Important:** When enabled, the following conditions must be met: • A proper minimum value must be programmed for [Sleep Level]. • A speed reference must be selected in [Speed Ref A Sel]. • At least one of the following must be programmed (and input closed) in [Digital Inx Sel]; "Enable," "Stop=CF," "Run," "Run Forward," "Run Reverse."	Default: 0 "Disabled" Options: 0 "Disabled" 1 "Direct" (Enabled)	

ATTENTION: Enabling the Sleep-Wake function can cause unexpected machine operation during the Wake mode. Equipment damage and/or personal injury can result if this parameter is used in an inappropriate application. Do Not use this function without considering the table below and applicable local, national & international codes, standards, regulations or industry guidelines.

Conditions Required to Start Drive(1)(2)(3)

Input	After Power-Up	After a Drive Fault		After a Stop Command
		Reset by Stop-CF, HIM or TB	*Reset by Clear Faults (TB)*	*HIM or TB*
Stop	Stop Closed Wake Signal	Stop Closed Wake Signal New Start or Run Cmd.(4)	Stop Closed Wake Signal	Stop Closed Analog Sig. > Sleep Level(6) New Start or Run Cmd.(4)
Enable	Enable Closed Wake Signal(4)	Enable Closed Wake Signal New Start or Run Cmd.(4)	Enable Closed Wake Signal	Enable Closed Analog Sig. > Sleep Level(6) New Start or Run Cmd.(4)
Run Run For. Run Rev.	Run Closed Wake Signal	New Run Cmd.(5) Wake Signal	Run Closed Wake Signal	New Run Cmd.(5) Wake Signal

(1) When power is cycled, if all conditions are present after power is restored, restart will occur.

(2) If all conditions are present when [Sleep-Wake Mode] is "enabled," the drive will start.

(3) The active speed reference is determined as explained in Reference Control on page 1-22. The Sleep/Wake function and the speed reference may be assigned to the same input.

(4) Command must be issued from HIM, TB or network.

(5) Run Command must be cycled.

(6) Signal does not need to be greater than wake level.

	179	**[Sleep-Wake Ref]** Selects the source of the input controlling the Sleep-Wake function.	Default: 2 "Analog In 2" Options: 1 "Analog In 1" 2 "Analog In 2"	

File	Group	No.	Parameter Name & Description	Values	Related
DYNAMIC CONTROL	Restart Modes	180	**[Wake Level]** Defines the analog input level that will start the drive.	Default: 6.000 mA, 6.000 Volts Min/Max: [Sleep Level]/20.000 mA 10.000 Volts Units: 0.001 mA 0.001 Volts	181
		181	**[Wake Time]** Defines the amount of time at or above [Wake Level] before a Start is issued.	Default: 1.0 Secs 0.0 Secs Vector Min/Max: 0.0/30.0 Secs Units: 0.0/1000.0 Secs Vector 0.1 Secs	180
		182	**[Sleep Level]** Defines the analog input level that will stop the drive.	Default: 5.000 mA, 5.000 Volts Min/Max: 4.000 mA/[Wake Level] 0.000 Volts/[Wake Level] Units: 0.001 mA 0.001 Volts	183
		183	**[Sleep Time]** Defines the amount of time at or below [Sleep Level] before a Stop is issued.	Default: 1.0 Secs 0.0 Secs Vector Min/Max: 0.0/30.0 Secs Units: 0.0/1000.0 Secs Vector 0.1 Secs	182
	Power Loss	184	**[Power Loss Mode]** Sets the reaction to a loss of input power. Power loss is recognized when: • DC bus voltage is ≤ 73% of [DC Bus Memory] and [Power Loss Mode] is set to "Coast". • DC bus voltage is ≤ 82% of [DC Bus Memory] and [Power Loss Mode] is set to "Decel".	Default: 0 "Coast" Options: 0 "Coast" 1 "Decel" 2 "Continue" 3 "Coast Input" 4 "Decel Input"	013 185
		185	**[Power Loss Time]** Sets the time that the drive will remain in power loss mode before a fault is issued.	Default: 0.5 Secs Min/Max: 0.0/60.0 Secs Units: 0.1 Secs	184
		186	**[Power Loss Level]** Sets the level at which the [Power Loss Mode] selection will occur.	Default: Drive Rated Volts Min/Max: 0.0/999.9 VDC Units: 0.1 VDC	

The drive can use the percentages referenced in [Power Loss Mode] or a trigger point can be set for line loss detection as follows:

$V_{trigger}$ = [DC Bus Memory] – [Power Loss Level]

A digital input (programmed to "29, Pwr Loss Lvl") is used to toggle between fixed percentages and the detection level.

ATTENTION: Drive damage can occur if proper input impedance is not provided as explained below.

If the value for [Power Loss Level] is greater than 18% of [DC Bus Memory], the user must provide a minimum line impedance to limit inrush current when the power line recovers. The input impedance should be equal to or greater than the equivalent of a 5% transformer with a VA rating 5 times the drives input VA rating.

Utility File

File	Group	No.	Parameter Name & Description	Values	Related
UTILITY	Direction Config	190	**[Direction Mode]** Selects the method for changing drive direction. Mode — Direction Change Unipolar — Drive Logic Bipolar — Sign of Reference Reverse Dis — Not Changeable	Default: 0 "Unipolar" Options: 0 "Unipolar" 1 "Bipolar" 2 "Reverse Dis"	320 thru 327 361 thru 366
UTILITY	HIM Ref Config	192	**[Save HIM Ref]** Enables a feature to save the present frequency reference value issued by the HIM to Drive memory on power loss. Value is restored to the HIM on power up. At Powr Down: x x x x x x x x x x x x x x x 1 Bit #: 15 14 13 12 11 10 9 8 7 6 5 4 3 2 1 0 1 = Save at Power Down 0 = Do Not Save x = Reserved *Factory Default Bit Values*		
UTILITY	HIM Ref Config	193	**[Man Ref Preload]** Enables/disables a feature to automatically load the present "Auto" frequency reference value into the HIM when "Manual" is selected. Allows smooth speed transition from "Auto" to "Manual."	Default: 0 "Disabled" Options: 0 "Disabled" 1 "Enabled"	
UTILITY	MOP Config	194	**[Save MOP Ref]** Enables/disables the feature that saves the present MOP frequency reference at power down or at stop. At Stop / At Powr Down: x x x x x x x x x x x x x x 0 0 Bit #: 15 14 13 12 11 10 9 8 7 6 5 4 3 2 1 0 1 = Save at Power Down 0 = Do Not Save x = Reserved *Factory Default Bit Values*		
UTILITY	MOP Config	195	**[MOP Rate]** Sets rate of change of the MOP reference in response to a digital input.	Default: 1.0 Hz/s 30.0 RPM/s Vector Min/Max: 0.2/[Maximum Freq] 6.0/[Maximum Freq] Vector Units: 0.1 Hz/s 0.1 RPM/s Vector	
UTILITY	Drive Mem.	196	**[Param Access Lvl]** Selects the parameter display level. Basic = Reduced param. set Advanced = Full param. set	Default: 0 "Basic" Options: 0 "Basic" 1 "Advanced" 2 "Reserved" Vector	

File	Group	No.	Parameter Name & Description	Values	Related
UTILITY	Drive Memory	197	**[Reset To Defalts]** Resets parameters to factory defaults except [Language], [Param Access Lvl] & [Voltage Class] (params 196, 201 & 202). • Option 1 resets parameters to factory defaults based on [Voltage Class]. • Options 2 & 3 will reset parameters to factory defaults and set [Voltage Class] to low or high voltage settings. **Important:** Frames 5 & 6 - the internal fan voltage may have to be changed when using Option 2 or 3. See "Selecting /Verifying Fan Voltage" on page 1-8.	Default: 0 "Ready" Options: 0 "Ready" 1 "Factory" 2 "Low Voltage" 3 "High Voltage"	041 thru 047 054 055 062 063 069 thru 072 082 148 158
		198	**[Load Frm Usr Set]** Loads a previously saved set of parameter values from a selected user set location in drive nonvolatile memory to active drive memory.	Default: 0 "Ready" Options: 0 "Ready" 1 "User Set 1" 2 "User Set 2" 3 "User Set 3"	199
		199	**[Save To User Set]** Saves the parameter values in active drive memory to a user set in drive nonvolatile memory.	Default: 0 "Ready" Options: 0 "Ready" 1 "User Set 1" 2 "User Set 2" 3 "User Set 3"	198
		200	**[Reset Meters]** Resets selected meters to zero.	Default: 0 "Ready" Options: 0 "Ready" 1 "MWh" 2 "Elapsed Time"	
		201	**[Language]** Selects the display language when using an LCD HIM. This parameter is not functional with an LED HIM. Options 6, 8 and 9 are "Reserved."	Default: 0 "Not Selected" Options: 0 "Not Selected" 1 "English" 2 "Francais" 3 "Español" 4 "Italiano" 5 "Deutsch" 7 "Português" 10 "Nederlands"	
		202	**[Voltage Class]** Configures the drive current rating and associates it with the selected voltage (i.e. 400 or 480V). Normally used when downloading parameter sets. Options 2 & 3 indicate status only. Selecting Option 4 or 5 will covert/configure the drive. **Important:** Frames 5 & 6 - the internal fan voltage may have to be changed when using Option 4 or 5. See "Selecting /Verifying Fan Voltage" on page 1-8.	Default: Based on Drive Cat. No. Options: 2 "Low Voltage" 3 "High Voltage" 4 "Convert Lo V" Vector 5 "Convert Hi V" Vector	041 thru 047 054 055 062 063 069 thru 072 082 148 158

File	Group	No.	Parameter Name & Description	Values	Related
UTILITY	Drive Memory	203	**[Drive Checksum]** Provides a checksum value that indicates whether or not a change in drive programming has occurred.	Default: Read Only Min/Max: 0/65535 Units: 1	
UTILITY	Diagnostics	209	**[Drive Status 1]** Present operating condition of the drive.	Read Only	210
UTILITY	Diagnostics	210	**[Drive Status 2]** Present operating condition of the drive.	Read Only	209
UTILITY	Diagnostics	211	**[Drive Alarm 1]** Alarm conditions that currently exist in the drive.	Read Only	212

[Drive Status 1] — Bit #

Bit #	15	14	13	12	11	10	9	8	7	6	5	4	3	2	1	0
	Spd Ref ID 3 (2)	Spd Ref ID 2 (2)	Spd Ref ID 1 (2)	Spd Ref ID 0 (2)	Local ID 2 (1)	Local ID 1 (1)	Local ID 0 (1)	At Speed	Faulted	Alarm	Decelerating	Accelerating	Actual Dir	Command Dir	Active	Ready
	0	0	0	0	1	1	1	0	1	0	0	0	1	1	0	0

1 = Condition True
0 = Condition False
x = Reserved

Bits (2) 15	14	13	12	Description
0	0	0	0	Ref A Auto
0	0	0	1	Ref B Auto
0	0	1	0	Preset 2 Auto
0	0	1	1	Preset 3 Auto
0	1	0	0	Preset 4 Auto
0	1	0	1	Preset 5 Auto
0	1	1	0	Preset 6 Auto
0	1	1	1	Preset 7 Auto
1	0	0	0	TB Manual
1	0	0	1	Port 1 Manual
1	0	1	0	Port 2 Manual
1	0	1	1	Port 3 Manual
1	1	0	0	Port 4 Manual
1	1	0	1	Port 5 Manual
1	1	1	0	Port 6 Manual
1	1	1	1	Jog Ref

Bits (1) 11	10	9	Description
0	0	0	Port 0 (TB)
0	0	1	Port 1
0	1	0	Port 2
0	1	1	Port 3
1	0	0	Port 4
1	0	1	Port 5
1	1	0	Port 6
1	1	1	No Local Control

[Drive Status 2] — Bit #

Bit #	15	14	13	12	11	10	9	8	7	6	5	4	3	2	1	0
			DPI at 500 k	Motor Overld	Bus Freq Reg	Curr Limit	AutoRst Act	AutoRst Ctdn		AutoTuning	DC Braking	Stopping	Jogging	Running	Active	Ready
	x	x	0	0	0	0	0	0	x	0	0	0	0	0	0	0

1 = Condition True
0 = Condition False
x = Reserved

[Drive Alarm 1] — Bit #

Bit #	15	14	13	12	11	10	9	8	7	6	5	4	3	2	1	0
						Waking	Decel Inhibit	Drv OL Lvl 2	Drv OL Lvl 1		IntDBRes OH	Anlg in Loss	Str At PwrUp	Power Loss	UnderVoltage	Prechrg Actv
	x	x	x	x	x	0	0	0	0	x	0	0	0	0	0	0

1 = Condition True
0 = Condition False
x = Reserved

File	Group	No.	Parameter Name & Description	Values	Related
UTILITY	Diagnostics	212	**[Drive Alarm 2]** Alarm conditions that currently exist in the drive.	Read Only	211
		213	**[Speed Ref Source]** Displays the source of the speed reference to the drive.	Default: Read Only Options: 0 "PI Output" 1 "Analog In 1" 2 "Analog In 2" 3-6 "Reserved" 7 "Pulse In" 8 "Encoder" 9 "MOP Level" 10 "Jog Speed" 11 "Preset Spd1" 12 "Preset Spd2" 13 "Preset Spd3" 14 "Preset Spd4" 15 "Preset Spd5" 16 "Preset Spd6" 17 "Preset Spd7" 18 "DPI Port 1" 19 "DPI Port 2" 20 "DPI Port 3" 21 "DPI Port 4" 22 "DPI Port 5" 23 "Reserved" 24 "Auto Tune" Vector 25 "Jog Speed 2" Vector	090 093 096 101
		214	**[Start Inhibits]** Displays the inputs currently preventing the drive from starting.	Read Only	

212 [Drive Alarm 2]

Bit #	15	14	13	12	11	10	9	8	7	6	5	4	3	2	1	0
	x	x	x	0	0	0	0	0	0	0	0	0	0	0	0	0
				Sleep Config	Ixo Vlt Rang	SpdRef Cflct	FlxAmps Rang	IR Vlts Rang	VHz NegSlope	MaxFrq Cflct	NP Hz Cflct	MtrTyp Cflct	BipolrCflct	DigIn CflctC	DigIn CflctB	DigIn CflctA

1 = Condition True
0 = Condition False
x = Reserved

214 [Start Inhibits]

Bit #	15	14	13	12	11	10	9	8	7	6	5	4	3	2	1	0
	x	x	0	0	0	0	0	1	x	0	0	1	0	0	0	1
			DPI Port 5	DPI Port 4	DPI Port 3	DPI Port 2	DPI Port 1	Digital In		Startup Actv	Params Reset	Stop Asserted	DC Bus Pchrg	Enable	Type 2 Alarm	Fault

1 = Inhibit True
0 = Inhibit False
x = Reserved

File	Group	No.	Parameter Name & Description	Values	Related
UTILITY	Diagnostics	215	**[Last Stop Source]** Displays the source that initiated the most recent stop sequence. It will be cleared (set to 0) during the next start sequence.	Default: Read Only Options: 0 "Pwr Removed" 1-5 "DPI Port 1-5" 6 "Reserved" 7 "Digital In" 8 "Fault" 9 "Not Enabled" 10 "Sleep" 11 "Jog" 12 "Autotune" Vector 13 "Precharge" Vector	361 362 363 364 365 366
		216	**[Dig In Status]** Status of the digital inputs. Digital In6, Digital In5, Digital In4, Digital In3, Digital In2, Digital In1 x x x x x x x x x x 0 0 0 0 0 0 15 14 13 12 11 10 9 8 7 6 5 4 3 2 1 0 Bit # 1 = Input Present 0 = Input Not Present x = Reserved	Read Only	361 thru 366
		217	**[Dig Out Status]** Status of the digital outputs. Digital Out3 *, Digital Out2, Digital Out1 x x x x x x x x x x x x x 0 0 0 15 14 13 12 11 10 9 8 7 6 5 4 3 2 1 0 Bit # 1 = Output Energized 0 = Output De-energized x = Reserved * Vector Control Option Only	Read Only	380 384 388 thru 380 384 388
		218	**[Drive Temp]** Present operating temperature of the drive power section.	Default: Read Only Min/Max: 0.0/100.0% Units: 0.1%	
		219	**[Drive OL Count]** Accumulated percentage of drive overload. Continuously operating the drive over 100% of its rating will increase this value to 100% and cause a drive fault or foldback depending on the setting of [Drive OL Mode].	Default: Read Only Min/Max: 0.0/100.0% Units: 0.1%	150

File	Group	No.	Parameter Name & Description	Values	Related
UTILITY	Diagnostics	220	**[Motor OL Count]** Accumulated percentage of motor overload. Continuously operating the motor over 100% of the motor overload setting will increase this value to 100% and cause a drive fault.	Default: Read Only Min/Max: 0.0/100.0% Units: 0.1%	047 048
		224	**Standard [Fault Frequency]** Captures and displays the output speed of the drive at the time of the last fault.	Default: Read Only Min/Max: 0.0/+[Maximum Freq] Units: 0.1 Hz	225 thru 230
			Vector [Fault Speed] See description above.	Default: Read Only Min/Max: 0.0/+[Maximum Freq] 0.0/+[Maximum Speed] Units: 0.1 Hz 0.1 RPM	079 225 thru 230
		225	**[Fault Amps]** Captures and displays motor amps at the time of the last fault.	Default: Read Only Min/Max: 0.0/[Rated Amps] × 2 Units: 0.1 Amps	224 thru 230
		226	**[Fault Bus Volts]** Captures and displays the DC bus voltage of the drive at the time of the last fault.	Default: Read Only Min/Max: 0.0/Max Bus Volts Units: 0.1 VDC	224 thru 230
		227	**[Status 1 @ Fault]** Captures and displays [Drive Status 1] bit pattern at the time of the last fault.	Read Only	209 224 thru 230
		228	**[Status 2 @ Fault]** Captures and displays [Drive Status 2] bit pattern at the time of the last fault.	Read Only	210 224 thru 230

Bit # 15 14 13 12 11 10 9 8 7 6 5 4 3 2 1 0

Bit #	15	14	13	12	11	10	9	8	7	6	5	4	3	2	1	0
					Spd Ref ID 3	Spd Ref ID 2	Spd Ref ID 1	Spd Ref ID 0	Local ID 2	Local ID 1	Local ID 0	At Speed	Faulted	Alarm	Decelerating	Accelerating
227	0	0	0	0	1	1	1	0	1	0	0	0	1	1	0	0
					Actual Dir	Command Dir	Active	Ready								
228	x	x	0	0	0	0	0	0	x	0	0	0	0	0	0	0
			DPI at 500 k	Motor Overld	Bus Freq Reg	Curr Limit	AutoRst Act	AutoRst Ctdn		AutoTuning	DC Braking	Stopping	Jogging	Running	Active	Ready

1 = Condition True
0 = Condition False
x = Reserved

File	Group	No.	Parameter Name & Description	Values	Related
UTILITY	Diagnostics	229	**[Alarm 1 @ Fault]** Captures and displays [Drive Alarm 1] at the time of the last fault.	Read Only	211 224 thru 230
		230	**[Alarm 2 @ Fault]** Captures and displays [Drive Alarm 2] at the time of the last fault.	Read Only	212 224 thru 230
		234 236	**[Testpoint 1 Sel]** **[Testpoint 2 Sel]** Selects the function whose value is displayed value in [Testpoint x Data]. These are internal values that are not accessible through parameters. See Testpoint Codes and Functions on page 4-13 for a listing of available codes and functions.	Default: 499 Min/Max: 0/65535 Units: 1	
		235 237 32	**[Testpoint 1 Data]** **[Testpoint 2 Data]** The present value of the function selected in [Testpoint x Sel].	Default: Read Only Min/Max: 0/4294967295 –/+2147483648 Vector Units: 1	
	Faults	238	**[Fault Config 1]** Enables/disables annunciation of the listed faults.		

229 — Captures and displays [Drive Alarm 1] at the time of the last fault.

Bit #	15	14	13	12	11	10	9	8	7	6	5	4	3	2	1	0
	x	x	x	x	x	0	0	0	0	x	0	0	0	0	0	0
						Waking	Decel Inhibit	Drv OL Lvl 2	Drv OL Lvl 1		IntDBRes OH	Anlg in Loss	Str At PwrUp	Power Loss	UnderVoltage	Precing Actv

1 = Condition True
0 = Condition False
x = Reserved

230 — Captures and displays [Drive Alarm 2] at the time of the last fault.

Bit #	15	14	13	12	11	10	9	8	7	6	5	4	3	2	1	0
	x	x	x	0	0	0	0	0	0	0	0	0	0	0	0	0
				Sleep Config	Ixo Vlt Rang	SpdRef Cflct	FlxAmps Rang	IR Vlts Rang	VHz NegSlope	MaxFrq Cflct	NP Hz Cflct	MtrTyp Cflct	Bipolr Cflct	DigIn CflctC	DigIn CflctB	DigIn CflctA

1 = Condition True
0 = Condition False
x = Reserved

238 — Enables/disables annunciation of the listed faults.

Bit #	15	14	13	12	11	10	9	8	7	6	5	4	3	2	1	0
	x	x	x	x	x	x	x	x	x	1	0	0	1	x	1	0
											Decel Inhibit	AutRst Tries	Shear Pin	Motor OverLd	UnderVoltage	Power Loss

1 = Enabled
0 = Disabled
x = Reserved

Factory Default Bit Values

File	Group	No.	Parameter Name & Description	Values	Related
UTILITY	Faults	240	**[Fault Clear]** Resets a fault and clears the fault queue.	Default: 0 "Ready" Options: 0 "Ready" 1 "Clear Faults" 2 "Clr Flt Que"	
		241	**[Fault Clear Mode]** Enables/disables a fault reset (clear faults) attempt from any source. This does not apply to fault codes which are cleared indirectly via other actions.	Default: 1 "Enabled" Options: 0 "Disabled" 1 "Enabled"	
		242 32	**[Power Up Marker]** Elapsed hours since initial drive power up. This value will rollover to 0 after the drive has been powered on for more than the max value shown. For relevance to most recent power up see [Fault x Time].	Default: Read Only Min/Max: 0.0000/429496.7295 Hr Units: 0.0001 Hr 0.1 Hr Vector	244 246 248 250 252 254 256 258
		243 245 247 249 251 253 255 257	**[Fault 1 Code]** **[Fault 2 Code]** **[Fault 3 Code]** **[Fault 4 Code]** **[Fault 5 Code]** **[Fault 6 Code]** **[Fault 7 Code]** **[Fault 8 Code]** A code that represents the fault that tripped the drive. The codes will appear in these parameters in the order they occur ([Fault 1 Code] = the most recent fault).	Default: Read Only Min/Max: 0/65535 Units: 0	
		244 246 248 250 252 254 256 258 32	**[Fault 1 Time]** **[Fault 2 Time]** **[Fault 3 Time]** **[Fault 4 Time]** **[Fault 5 Time]** **[Fault 6 Time]** **[Fault 7 Time]** **[Fault 8 Time]** The time between **initial** drive power up and the occurrence of the associated trip fault. Can be compared to [Power Up Marker] for the time from the most recent power up. [Fault x Time] – [Power Up Marker] = Time difference to the most recent power up. A negative value indicates fault occurred before most recent power up. A positive value indicates fault occurred after most recent power up.	Default: Read Only Min/Max: 0.0000/429496.7295 Hr 0.0000/214748.3647 Hr Units: 0.0001 Hr	242

File	Group	No.	Parameter Name & Description	Values	Related
UTILITY	Alarms	259	**[Alarm Config 1]** Enables/disables alarm conditions that will initiate an active drive alarm. Waking, Decel Inhibit, Drv OL Lvl 2, Drv OL Lvl 1, IntDBRes OH, Anlg In Loss, Str At PwrUp, Power Loss, UnderVoltage, Prechrg Actv Bit # 15 14 13 12 11 10 9 8 7 6 5 4 3 2 1 0 Factory Default Bit Values: x x x x x 1 1 1 1 x 1 1 1 1 1 1 1 = Enabled 0 = Disabled x = Reserved		
		261	**[Alarm Clear]** Resets all [Alarm 1-8 Code] parameters to zero.	Default: 0 "Ready" Options: 0 "Ready" 1 "Clr Alrm Que"	262 263 264 265 266 267 268 269
		262 263 264 265 266 267 268 269	**[Alarm 1 Code]** **[Alarm 2 Code]** **[Alarm 3 Code]** **[Alarm 4 Code]** **[Alarm 5 Code]** **[Alarm 6 Code]** **[Alarm 7 Code]** **[Alarm 8 Code]** A code that represents a drive alarm. The codes will appear in the order they occur (first 4 alarms in – first 4 out alarm queue). A time stamp is not available with alarms.	Default: Read Only Min/Max: 0/65535 Units: 1	261
	Scaled Blocks	476 482	Vector **[Scale1 In Value]** Vector **[Scale2 In Value]** Displays the value of the signal being sent to [ScaleX In Value] using a link.	Default: 0.0 Min/Max: –/+32000.0 Units: 0.1	
		477 483	Vector **[Scale1 In Hi]** Vector **[Scale2 In Hi]** Scales the upper value of [ScaleX In Value].	Default: 0.0 Min/Max: –/+32000.0 Units: 0.1	
		478 484	Vector **[Scale1 In Lo]** Vector **[Scale2 In Lo]** Scales the lower value of [ScaleX In Value].	Default: 0.0 Min/Max: –/+32000.0 Units: 0.1	
		479 485	Vector **[Scale1 Out Hi]** Vector **[Scale2 Out Hi]** Scales the upper value of [ScaleX Out Value].	Default: 0.0 Min/Max: –/+32000.0 Units: 0.1	

File	Group	No.	Parameter Name & Description	Values	Related
UTILITY	Scaled Blocks	480 486	Vector **[Scale1 Out Lo]** Vector **[Scale2 Out Lo]** Scales the lower value of [ScaleX Out Value].	Default: 0.0 Min/Max: –/+32000.0 Units: 0.1	
		481 487	Vector **[Scale1 Out Value]** Vector **[Scale2 Out Value]** Value of the signal being sent out of the Universal Scale block. Typically this value is used as the source of information and will be linked to another parameter.	Default: Read Only Min/Max: –/+32000.0 Units: 0.1	

Communication File

File	Group	No.	Parameter Name & Description	Values	Related
COMMUNICATION	Comm Control	270	Standard **[DPI Data Rate]** Sets the baud rate for attached drive peripherals. When changing this value the drive must be reset for the change to take affect.	Default: 1 "500 kbps" Options: 0 "125 kbps" 1 "500 kbps"	
			Vector **[DPI Baud Rate]** See description above.		
		271	**[Drive Logic Rslt]** The final logic command resulting from the combination of all DPI and discrete inputs. This parameter has the same structure as the product-specific logic command received via DPI and is used in peer to peer communications.	Read Only	

MOP Dec	Spd Ref ID 2 (1)	Spd Ref ID 1 (1)	Spd Ref ID 0 (1)	Decel 2	Decel 1	Accel 2	Accel 1	Mop Inc	Local Contrl	Reverse	Forward	Clear Fault	Jog	Start	Stop
0	0	0	0	1	1	1	0	1	0	0	0	1	1	0	0
15	14	13	12	11	10	9	8	7	6	5	4	3	2	1	0

Bit #

1 = Condition True
0 = Condition False
x = Reserved

Bits(1)			Description
14	13	12	
0	0	0	No Command - Man. Mode
0	0	1	Ref A Auto
0	1	0	Ref B Auto
0	1	1	Preset 3 Auto
1	0	0	Preset 4 Auto
1	0	1	Preset 5 Auto
1	1	0	Preset 6 Auto
1	1	1	Preset 7 Auto

File	Group	No.	Parameter Name & Description	Values	Related
COMMUNICATION	Comm Control	272	**[Drive Ref Rslt]** Present frequency reference scaled as a DPI reference for peer to peer communications. The value shown is the value prior to the accel/decel ramp and the corrections supplied by slip comp, PI, etc.	Default: Read Only Min/Max: –/+32767 Units: 1	
		273	**[Drive Ramp Rslt]** Present frequency reference scaled as a DPI reference for peer to peer communications. The value shown is the value after the accel/decel ramp, but prior to any corrections supplied by slip comp, PI, etc.	Default: Read Only Min/Max: –/+32767 Units: 1	
		274	Vector **[DPI Port Sel]** Selects which DPI port reference value will appear in [DPI Port Value].	Default: "DPI Port 1" Options: 1 "DPI Port 1" 2 "DPI Port 2" 3 "DPI Port 3" 4 "DPI Port 4" 5 "DPI Port 5"	
		275	Vector **[DPI Port Value]** Value of the DPI reference selected in [DPI Port Sel].	Default: Read Only Min/Max: –/+32767 Units: 1	
	Masks & Owners	276	**[Logic Mask]** Determines which adapters can control the drive. If the bit for an adapter is set to "0," the adapter will have no control functions except for stop.		288 thru 297
		277	**[Start Mask]** Controls which adapters can issue start commands.	See [Logic Mask].	288 thru 297
		278	**[Jog Mask]** Controls which adapters can issue jog commands.	See [Logic Mask].	288 thru 297
		279	**[Direction Mask]** Controls which adapters can issue forward/reverse direction commands.	See [Logic Mask].	288 thru 297
		280	**[Reference Mask]** Controls which adapters can select an alternate reference; [Speed Ref A, B Sel] or [Preset Speed 1-7].	See [Logic Mask].	288 thru 297

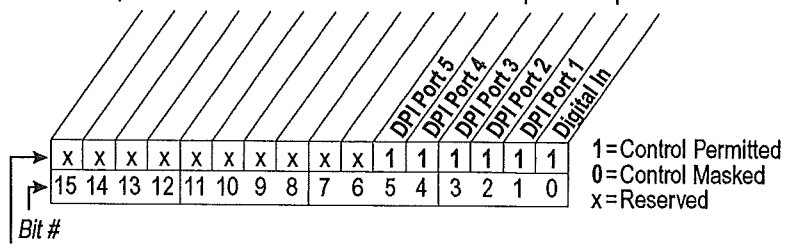

1 = Control Permitted
0 = Control Masked
x = Reserved

File	Group	No.	Parameter Name & Description	Values	Related
COMMUNICATIONS	Masks & Owners	281	**[Accel Mask]** Controls which adapters can select [Accel Time 1, 2].	See [Logic Mask].	288 thru 297
		282	**[Decel Mask]** Controls which adapters can select [Decel Time 1, 2].	See [Logic Mask].	288 thru 297
		283	**[Fault Clr Mask]** Controls which adapters can clear a fault.	See [Logic Mask].	288 thru 297
		284	**[MOP Mask]** Controls which adapters can issue MOP commands to the drive.	See [Logic Mask].	288 thru 297
		285	**[Local Mask]** Controls which adapters are allowed to take exclusive control of drive logic commands (except stop). Exclusive "local" control can only be taken while the drive is stopped.	See [Logic Mask].	288 thru 297
		288	**[Stop Owner]** Adapters that are presently issuing a valid stop command.	Read Only	276 thru 285
		289	**[Start Owner]** Adapters that are presently issuing a valid start command.	See [Stop Owner].	276 thru 285
		290	**[Jog Owner]** Adapters that are presently issuing a valid jog command.	See [Stop Owner].	276 thru 285
		291	**[Direction Owner]** Adapter that currently has exclusive control of direction changes.	See [Stop Owner].	276 thru 285
		292	**[Reference Owner]** Adapter that has the exclusive control of the command frequency source selection.	See [Stop Owner].	276 thru 285
		293	**[Accel Owner]** Adapter that has exclusive control of selecting [Accel Time 1, 2].	See [Stop Owner].	140 276 thru 285

										DPI Port 5	DPI Port 4	DPI Port 3	DPI Port 2	DPI Port 1	Digital In
x	x	x	x	x	x	x	x	x	x	0	0	0	0	0	1
15	14	13	12	11	10	9	8	7	6	5	4	3	2	1	0

Bit #

1 = Issuing Command
0 = No Command
x = Reserved

File	Group	No.	Parameter Name & Description	Values	Related
COMMUNICATIONS	Masks & Owners	294	**[Decel Owner]** Adapter that has exclusive control of selecting [Decel Time 1, 2].	See [Stop Owner].	142 276 thru 285
		295	**[Fault Clr Owner]** Adapter that is presently clearing a fault.	See [Stop Owner].	276 thru 285
		296	**[MOP Owner]** Adapters that are currently issuing increases or decreases in MOP command frequency.	See [Stop Owner].	276 thru 285
		297	**[Local Owner]** Adapter that has requested exclusive control of all drive logic functions. If an adapter is in local lockout, all other functions (except stop) on all other adapters are locked out and non-functional. Local control can only be obtained when the drive is not running.	See [Stop Owner].	276 thru 285
	Datalinks	300 301	**[Data In A1] - Link A Word 1** **[Data In A2] - Link A Word 2** Parameter number whose value will be written from a communications device data table. Standard Control – Parameters that can only be changed while drive is stopped cannot be used as Datalink inputs. Entering a parameter of this type will "Disable" the link. Vector Control – Will not be updated until drive is stopped. Refer to your communications option manual for datalink information.	Default: 0 (0 = "Disabled") Min/Max: 0/387 0/544 Vector Units: 1	
		302 303	**[Data In B1] - Link B Word 1** **[Data In B2] - Link B Word 2**	See [Data In A1] - Link A Word 1 [Data In A2] - Link A Word 2.	
		304 305	**[Data In C1] - Link C Word 1** **[Data In C2] - Link C Word 2**	See [Data In A1] - Link A Word 1 [Data In A2] - Link A Word 2.	
		306 307	**[Data In D1] - Link D Word 1** **[Data In D2] - Link D Word 2**	See [Data In A1] - Link A Word 1 [Data In A2] - Link A Word 2.	
		310 311	**[Data Out A1] - Link A Word 1** **[Data Out A2] - Link A Word 2** Parameter number whose value will be written to a communications device data table.	Default: 0 (0 = "Disabled") Min/Max: 0/387 0/544 Vector Units: 1	

File	Group	No.	Parameter Name & Description	Values	Related
COMMUNICATIONS	Datalinks	312 313	**[Data Out B1] - Link B Word 1** **[Data Out B2] - Link B Word 2**	See [Data Out A1] - Link A Word 1 [Data Out A2] - Link A Word 2.	
		314 315	**[Data Out C1] - Link C Word 1** **[Data Out C2] - Link C Word 2**	See [Data Out A1] - Link A Word 1 [Data Out A2] - Link A Word 2.	
		316 317	**[Data Out D1] - Link D Word 1** **[Data Out D2] - Link D Word 2**	See [Data Out A1] - Link A Word 1 [Data Out A2] - Link A Word 2.	

Inputs & Outputs File

File	Group	No.	Parameter Name & Description	Values	Related
INPUTS & OUTPUTS	Analog Inputs	320	**[Anlg In Config]** Selects the mode for the analog inputs. Analog In 2 / Analog In 1 x x x x x x x x x x x x x x 0 0 15 14 13 12 11 10 9 8 7 6 5 4 3 2 1 0 Bit # *Factory Default Bit Values* 1 = Current 0 = Voltage x = Reserved		322 325 323 326
		321	**[Anlg In Sqr Root]** Enables/disables the square root function for each input. Analog In 2 / Analog In 1 x x x x x x x x x x x x x x 0 0 15 14 13 12 11 10 9 8 7 6 5 4 3 2 1 0 Bit # *Factory Default Bit Values* 1 = Enable 0 = Disable x = Reserved		
		322 325	**[Analog In 1 Hi]** **[Analog In 2 Hi]** Sets the highest input value to the analog input x scaling block. [Anlg In Config], parameter 320 defines if this input will be –/+10V or 4-20 mA.	Default: 10.000 Volt 10.000 Volt Min/Max: 4.000/20.000mA –/+10.000V 0.000/10.000V Units: 0.001 mA 0.001 Volt	091 092

File	Group	No.	Parameter Name & Description	Values	Related
INPUTS & OUTPUTS	Analog Inputs	323 326	**[Analog In 1 Lo]** **[Analog In 2 Lo]** Sets the lowest input value to the analog input x scaling block. [Anlg In Config], parameter 320 defines if this input will be –/+10V or 4-20 mA.	Default: 0.000 Volt 0.000 Volt Min/Max: 4.000/20.000mA –/+10.000V 0.000/10.000V Units: 0.001 mA 0.001 Volt	091 092
		324 327	**[Analog In 1 Loss]** **[Analog In 2 Loss]** Selects drive action when an analog signal loss is detected. Signal loss is defined as an analog signal less than 1V or 2mA. The signal loss event ends and normal operation resumes when the input signal level is greater than or equal to 1.5V or 3mA.	Default: 0 "Disabled" 0 "Disabled" Options: 0 "Disabled" 1 "Fault" 2 "Hold Input" 3 "Set Input Lo" 4 "Set Input Hi" 5 "Goto Preset1" 6 "Hold OutFreq"	091 092
	Analog Outputs	340	**[Anlg Out Config]** Selects the mode for the analog outputs. .		
		341	**[Anlg Out Absolut]** Selects whether the signed value or absolute value of a parameter is used before being scaled to drive the analog output.		

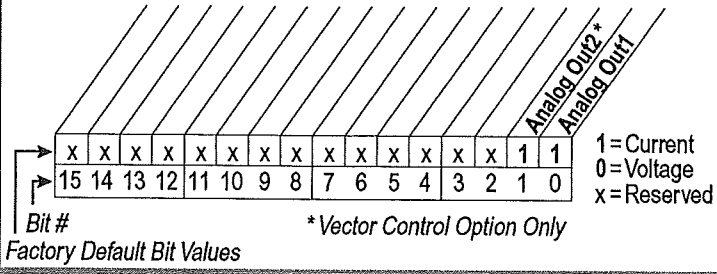

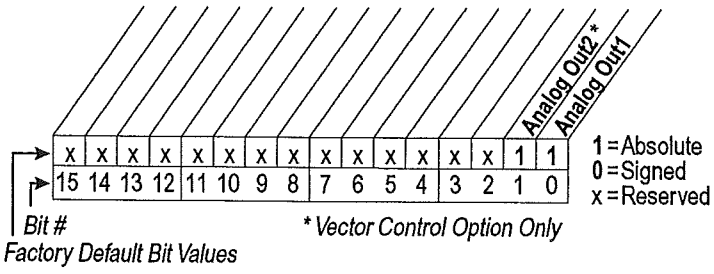

File	Group	No.	Parameter Name & Description	Values	Related
INPUTS & OUTPUTS	Analog Outputs	342 345	**[Analog Out1 Sel]** **Vector** **[Analog Out2 Sel]** Selects the source of the value that drives the analog output.	Default: 0 "Output Freq" Options: See Table	001 002 003 004 005 007 006 012 135 136 137 138 220 219
		343 346	**[Analog Out1 Hi]** **Vector** **[Analog Out2 Hi]** Sets the analog output value when the source value is at maximum.	Default: 20.00 mA, 10.00 Volts Min/Max: 4.000/20.000mA –/+10.000V 0.000/10.000V Units: 0.001 mA 0.001 Volt	340 342 345
		344 347	**[Analog Out1 Lo]** **Vector** **[Analog Out2 Lo]** Sets the analog output value when the source value is at minimum.	Default: 0.00 mA, 0.00 Volts Min/Max: 4.000/20.000mA –/+10.000V 0.000/10.000V Units: 0.001 mA 0.001 Volt	340 342 345

Options	[Analog Out1 Lo] Value: *Param. 341 = Signed*	[Analog Out1 Lo] Value: *Param. 341 = Absolute*	[Analog Out1 Hi] Value
0 "Output Freq"	–[Maximum Speed]	0 Hz	+[Maximum Speed]
1 "Command Freq"	–[Maximum Speed]	0 Hz	+[Maximum Speed]
1* "Command Spd"	–[Maximum Speed]	0 Hz/RPM	+[Maximum Speed]
2 "Output Amps"	0 Amps	0 Amps	200% Rated
3 "Torque Amps"	–200% Rated	0 Amps	200% Rated
4 "Flux Amps"	0 Amps	0 Amps	200% Rated
5 "Output Power"	0 kW	0 kW	200% Rated
6 "Output Volts"	0 Volts	0 Volts	120% Rated Input Volts
7 "DC Bus Volts"	0 Volts	0 Volts	200% Rated Input Volts
8 "PI Reference"	–100%	0%	100%
9 "PI Feedback"	–100%	0%	100%
10 "PI Error"	–100%	0%	100%
11 "PI Output"	–100%	0%	100%
12 "%Motor OL"	0%	0%	100%
13 "%Drive OL"	0%	0%	100%
14* "CommandedTrq"	–800%	0%	+800%
15* "MtrTrqCurRef"	–800%	0%	+800%
16* "Speed Ref"	–[Maximum Speed]	0 Hz/RPM	+[Maximum Speed]
17* "Speed Fdbk"	–[Maximum Speed]	0 Hz/RPM	+[Maximum Speed]
18* "Pulse In Ref"	–25200.0 RPM	0 Hz/RPM	+[Maximum Speed]
19* "Torque Est"	–800%	0 Hz/RPM	+800%

* Vector Control Option Only

File	Group	No.	Parameter Name & Description	Values			Related
INPUTS & OUTPUTS	Digital Inputs	361	**[Digital In1 Sel]**	Default:	4	"Stop – CF"	
		362	**[Digital In2 Sel]**	Default:	5	"Start"	
		363	**[Digital In3 Sel]**	Default:	18	"Auto/ Manual"	
		364	**[Digital In4 Sel]**	Default:	15	"Speed Sel 1"	
		365	**[Digital In5 Sel]**	Default:	16	"Speed Sel 2"	
		366	**[Digital In6 Sel]**(11)	Default:	17	"Speed Sel 3"	
			Selects the function for the digital inputs.	Options:	0	"Not Used"	
			(1) Speed Select Inputs.		1	"Enable"(8)(10)	
					2	"Clear Faults"(CF)(4)	
					3	"Aux Fault"	
					4	"Stop – CF"(10)	
					5	"Start"(5)(9)	
					6	"Fwd/ Reverse"(5)	
					7	"Run"(6)(10)	
					8	"Run Forward"(6)	
					9	"Run Reverse"(6)	
					10	"Jog"(5) "Jog1"(2)(5)	
					11	"Jog Forward"	100
					12	"Jog Reverse"	
					13	"Stop Mode B"	
					14	"Bus Reg Md B"	156
					15-17	"Speed Sel 1-3"(1)	162
					18	"Auto/ Manual"(7)	
					19	"Local"	
					20	"Acc2 & Dec2"	
					21	"Accel 2"	096
					22	"Decel 2"	
					23	"MOP Inc"	140
					24	"MOP Dec"	
					25	"Excl Link"	
					26	"PI Enable"	194
					27	"PI Hold"	
					28	"PI Reset"	380
					29	"Pwr Loss Lvl"	384
					30	"Precharge En"	388
					31-33	"Spd/Trq Sel1-3"(2,3)	124
					34	"Jog 2"(2)	

3	2	1	Auto Reference Source
0	0	0	Reference A
0	0	1	Reference B
0	1	0	Preset Speed 2
0	1	1	Preset Speed 3
1	0	0	Preset Speed 4
1	0	1	Preset Speed 5
1	1	0	Preset Speed 6
1	1	1	Preset Speed 7

To access Preset Speed 1, set [Speed Ref x Sel] to "Preset Speed 1".

Type 2 Alarms - Some digital input programming may cause conflicts that will result in a Type 2 alarm. Example: [Digital In1 Sel] set to "5, Start" in 3-wire control and [Digital In2 Sel] set to 7 "Run" in 2-wire.

Refer to Table 4.C for information on resolving this type of conflict.

(2) Vector Control Option Only.

(3)

3	2	1	Spd/Trq Mode
0	0	0	Zero Torque
0	0	1	Spd Reg
0	1	0	Torque Reg
0	1	1	Min Spd/Trq
1	0	0	Max Spd/Trq
1	0	1	Sum Spd/Trq
1	1	0	Absolute
1	1	1	Zero Trq

(4) When [Digital Inx Sel] is set to option 2 "Clear Faults" the Stop button cannot be used to clear a fault condition.

(5) Typical 3-Wire Inputs - Requires that only 3-wire functions are chosen. Including 2-wire selections will cause a type 2 alarm.

(6) Typical 2-Wire Inputs - Requires that only 2-wire functions are chosen. Including 3-wire selections will cause a type 2 alarm.

(7) Auto/Manual - Refer to Figure 1.10 on page 1-22 for details.

(8) Opening an "Enable" input will cause the motor to coast-to-stop, ignoring any programmed Stop modes.

(9) A "Dig In ConflictB" alarm will occur if a "Start" input is programmed without a "Stop" input.

(10) Refer to the Sleep-Wake Mode Attention statement on page 3-32.

(11) A dedicated hardware enable input is available via a jumper selection. Refer to page 1-19 for further information.

File	Group	No.	Parameter Name & Description	Values	Related
INPUTS & OUTPUTS	Digital Outputs	380 384 388	**[Digital Out1 Sel]** **[Digital Out2 Sel]** Vector **[Digital Out3 Sel]** Selects the drive status that will energize a (CRx) output relay. (1) Any relay programmed as Fault or Alarm will energize (pick up) when power is applied to drive and deenergize (drop out) when a fault or alarm exists. Relays selected for other functions will energize only when that condition exists and will deenergize when condition is removed. Refer to pages 1-18 & 1-17. (2) Vector Control Option Only. (3) Activation level is defined in [Dig Outx Level] below.	Default: 1 "Fault" 4 "Run" 4 "Run" Options: 1 "Fault"(1) 2 "Alarm"(1) 3 "Ready" 4 "Run" 5 "Forward Run" 6 "Reverse Run" 7 "Auto Restart" 8 "Powerup Run" 9 "At Speed" 10 "At Freq"(3) 11 "At Current"(3) 12 "At Torque"(3) 13 "At Temp"(3) 14 "At Bus Volts"(3) 15 "At PI Error"(3) 16 "DC Braking" 17 "Curr Limit" 18 "Economize" 19 "Motor Overld" 20 "Power Loss" 21-26 "Input 1-6 Link" 27 "PI Enable"(2) 28 "PI Hold"(2) 29 "Drive Overload"(2)	381 385 389 382 386 390 383 002 001 003 004 218 012 137 157 147 053 048 184
		381 385 389	**[Dig Out1 Level]** **[Dig Out2 Level]** Vector **[Dig Out3 Level]** Sets the relay activation level for options 10 – 15 in [Digital Outx Sel]. Units are assumed to match the above selection (i.e. "At Freq" = Hz, "At Torque" = Amps).	Default: 0.0 0.0 Min/Max: 0.0/819.2 Units: 0.1	380 384 388
		382 386 390	**[Dig Out1 OnTime]** **[Dig Out2 OnTime]** Vector **[Dig Out3 OnTime]** Sets the "ON Delay" time for the digital outputs. This is the time between the occurrence of a condition and activation of the relay.	Default: 0.00 Secs 0.00 Secs Min/Max: 0.00/600.00 Secs Units: 0.01 Secs	380 384 388
		383 387 391	**[Dig Out1 OffTime]** **[Dig Out2 OffTime]** Vector **[Dig Out3 OffTime]** Sets the "OFF Delay" time for the digital outputs. This is the time between the disappearance of a condition and de-activation of the relay.	Default: 0.00 Secs 0.00 Secs Min/Max: 0.00/600.00 Secs Units: 0.01 Secs	380 384 388

Parameter Cross Reference – by Name

Parameter Name	Number	Group
Accel Mask	281	Masks & Owners
Accel Owner	293	Masks & Owners
Accel Time X	140-141	Ramp Rates
Alarm X @ Fault	229, 230	Diagnostics
Alarm X Code	262-269	Alarms
Alarm Clear	261	Alarms
Alarm Config 1	259	Alarms
Analog In X Hi	322, 325	Analog Inputs
Analog In X Lo	323, 326	Analog Inputs
Analog In X Loss	324, 327	Analog Inputs
Analog InX Value	16, 17	Metering
Analog OutX Hi	343, 346	Analog Outputs
Analog OutX Lo	344, 347	Analog Outputs
Analog OutX Sel	342, 345	Analog Outputs
Anlg In Config	320	Analog Inputs
Anlg In Sqr Root	321	Analog Inputs
Anlg Out Absolut	341	Analog Outputs
Anlg Out Config	340	Analog Outputs
Auto Rstrt Delay	175	Restart Modes
Auto Rstrt Tries	174	Restart Modes
Autotune	61	Torq Attributes
Autotune Torque	66	Torq Attributes
Break Frequency	72	Volts per Hertz
Break Voltage	71	Volts per Hertz
Bus Reg Kd	165	Stop/Brake Modes
Bus Reg Ki	160	Stop/Brake Modes
Bus Reg Kp	164	Stop/Brake Modes
Bus Reg Mode X	161, 162	Stop/Brake Modes
Commanded Freq	2	Metering
Commanded Speed	2	Metering
Commanded Torque	24	Metering
Compensation	56	Torq Attributes
Control Status	440	Torq Attributes
Control SW Ver	29	Drive Data
Current Lmt Gain	149	Load Limits
Current Lmt Sel	147	Load Limits
Current Lmt Val	148	Load Limits
Current Rate Limit	154	Load Limits
Data In XX	300-307	Datalinks
Data Out XX	310-317	Datalinks
DB Resistor Type	163	Stop/Brake Modes
DC Brake Level	158	Stop/Brake Modes
DC Brk Lvl Sel	157	Stop/Brake Modes
DC Brake Time	159	Stop/Brake Modes
DC Bus Memory	13	Metering
DC Bus Voltage	12	Metering
Decel Mask	282	Masks & Owners
Decel Owner	294	Masks & Owners
Decel Time X	142, 143	Ramp Rates
Dig In Status	216	Diagnostics
Dig Out Status	217	Diagnostics

Parameter Name	Number	Group
Dig OutX Level	381, 385, 389	Digital Outputs
Dig OutX OffTime	383, 387, 391	Digital Outputs
Dig OutX OnTime	382, 386, 390	Digital Outputs
Digital InX Sel	361-366	Digital Inputs
Digital OutX Sel	380, 384, 388	Digital Outputs
Direction Mask	279	Masks & Owners
Direction Mode	190	Direction Config
Direction Owner	291	Masks & Owners
DPI Baud Rate	270	Comm Control
DPI Data Rate	270	Comm Control
DPI Port Sel	274	Comm Control
DPI Port Value	275	Comm Control
Drive Alarm X	211-212	Diagnostics
Drive Checksum	203	Drive Memory
Drive Logic Rslt	271	Comm Control
Drive OL Count	219	Diagnostics
Drive OL Mode	150	Load Limits
Drive Ramp Rslt	273	Comm Control
Drive Ref Rslt	272	Comm Control
Drive Status X	209, 210	Diagnostics
Drive Temp	218	Diagnostics
Droop RPM @ FLA	152	Load Limits
Elapsed MWh	9	Metering
Elapsed Run Time	10	Metering
Enc Position Fdbk	414	Speed Feedback
Encoder PPR	413	Speed Feedback
Encoder Speed	415	Speed Feedback
Encoder Z Chan	423	Speed Feedback
Fault 1 Code	243	Faults
Fault 1 Time	244	Faults
Fault 2 Code	245	Faults
Fault 2 Time	246	Faults
Fault 3 Code	247	Faults
Fault 3 Time	248	Faults
Fault 4 Code	249	Faults
Fault 4 Time	250	Faults
Fault 5 Code	251	Faults
Fault 5 Time	252	Faults
Fault 6 Code	253	Faults
Fault 6 Time	254	Faults
Fault 7 Code	255	Faults
Fault 7 Time	256	Faults
Fault 8 Code	257	Faults
Fault 8 Time	258	Faults
Fault Amps	225	Diagnostics
Fault Bus Volts	226	Diagnostics
Fault Clear	240	Faults
Fault Clear Mode	241	Faults
Fault Clr Mask	283	Masks & Owners

Parameter Name	Number	Group
Fault Clr Owner	295	Masks & Owners
Fault Config 1	238	Faults
Fault Frequency	224	Diagnostics
Fault Speed	224	Diagnostics
Fdbk Filter Sel	416	Speed Feedback
Feedback Select	80	Spd Mode & Limits
Flux Braking	166	Stop/Brake Modes
Flux Current	5	Metering
Flux Current Ref	63	Torq Attributes
Flux Up Mode	57	Torq Attributes
Flux Up Time	58	Torq Attributes
Flying Start En	169	Restart Modes
Flying StartGain	170	Restart Modes
Inertia Autotune	67	Torq Attributes
IR Voltage Drop	62	Torq Attributes
Ixo Voltage Drop	64	Torq Attributes
Jog Mask	278	Masks & Owners
Jog Owner	290	Masks & Owners
Jog Speed/1	100	Discrete Speeds
Jog Speed 2	108	Discrete Speeds
Kf Speed Loop	447	Speed Regulator
Ki Speed Loop	445	Speed Regulator
Kp Speed Loop	446	Speed Regulator
Language	201	Drive Memory
Last Stop Source	215	Diagnostics
Load Frm Usr Set	198	Drive Memory
Local Mask	285	Masks & Owners
Local Owner	297	Masks & Owners
Logic Mask	276	Masks & Owners
Man Ref Preload	193	HIM Ref Config
Marker Pulse	421	Speed Feedback
Maximum Freq	55	Torq Attributes
Maximum Speed	82	Spd Mode & Limits
Maximum Voltage	54	Torq Attributes
Minimum Speed	81	Spd Mode & Limits
MOP Frequency	11	Metering
MOP Mask	284	Masks & Owners
MOP Owner	296	Masks & Owners
MOP Rate	195	MOP Config
MOP Reference	11	Metering
Motor Cntl Sel	53	Torq Attributes
Motor Fdbk Type	412	Speed Feedback
Motor NP FLA	42	Motor Data
Motor NP Hertz	43	Motor Data
Motor NP Power	45	Motor Data
Motor NP RPM	44	Motor Data
Motor NP Volts	41	Motor Data
Motor OL Count	220	Diagnostics
Motor OL Factor	48	Motor Data
Motor OL Hertz	47	Motor Data
Motor Poles	49	Motor Data
Motor Type	40	Motor Data
Mtr NP Pwr Units	46	Motor Data
Mtr Tor Cur Ref	441	Torq Attributes
Neg Torque Limit	437	Torq Attributes
Notch Filter Freq	419	Speed Feedback

Parameter Name	Number	Group
Notch Filter K	420	Speed Feedback
Output Current	3	Metering
Output Freq	1	Metering
Output Power	7	Metering
Output Powr Fctr	8	Metering
Output Voltage	6	Metering
Overspeed Limit	83	Spd Mode & Limits
Param Access Lvl	196	Drive Memory
PI Configuration	124	Process PI
PI Control	125	Process PI
PI Error Meter	137	Process PI
PI Fdback Meter	136	Process PI
PI Feedback Hi	462	Process PI
PI Feedback Lo	463	Process PI
PI Feedback Sel	128	Process PI
PI Integral Time	129	Process PI
PI Lower Limit	131	Process PI
PI Output Meter	138	Process PI
PI Preload	133	Process PI
PI Prop Gain	130	Process PI
PI Ref Meter	135	Process PI
PI Reference Hi	460	Process PI
PI Reference Lo	461	Process PI
PI Reference Sel	126	Process PI
PI Setpoint	127	Process PI
PI Status	134	Process PI
PI Upper Limit	132	Process PI
Pos Torque Limit	436	Torq Attributes
Power Loss Level	186	Power Loss
Power Loss Mode	184	Power Loss
Power Loss Time	185	Power Loss
Powerup Delay	167	Restart Modes
Power Up Marker	242	Faults
Preset Speed X	101-107	Discrete Speeds
Pulse Input Ref	99	Speed Reference
Pulse In Scale	422	Speed Feedback
PWM Frequency	151	Load Limits
Ramped Speed	22	Metering
Rated Amps	28	Drive Data
Rated kW	26	Drive Data
Rated Volts	27	Drive Data
Reference Mask	280	Masks & Owners
Reference Owner	292	Masks & Owners
Regen Power Limit	153	Load Limits
Reset Meters	200	Drive Memory
Reset To Defalts	197	Drive Memory
Rev Speed Limit	454	Speed Regulator
Run Boost	70	Volts per Hertz
S Curve %	146	Ramp Rates
Save HIM Ref	192	HIM Ref Config
Save MOP Ref	194	MOP Config
Save To User Set	199	Drive Memory
ScaleX In Value	476, 482	Scaled Blocks
ScaleX In Hi	477, 483	Scaled Blocks
ScaleX In Lo	478, 484	Scaled Blocks
ScaleX Out Hi	479, 485	Scaled Blocks

Parameter Name	Number	Group
ScaleX Out Lo	480, 486	Scaled Blocks
ScaleX Out Value	481, 487	Scaled Blocks
Skip Freq Band	87	Spd Mode & Limits
Skip Frequency X	84-86	Spd Mode & Limits
Sleep Level	182	Restart Modes
Sleep Time	183	Restart Modes
Sleep-Wake Mode	178	Restart Modes
Sleep-Wake Ref	179	Restart Modes
Slip Comp Gain	122	Slip Comp
Slip RPM @ FLA	121	Slip Comp
Slip RPM Meter	123	Slip Comp
Speed Desired BW	449	Speed Regulator
Speed Feedback	25	Metering
Speed Mode	80	Spd Mode & Limits
Speed Ref X Hi	91, 94	Speed Reference
Speed Ref X Lo	92, 95	Speed Reference
Speed Ref X Sel	90, 93	Speed Reference
Speed Ref Source	213	Diagnostics
Speed Reference	23	Metering
Speed Units	79	Spd Mode & Limits
Speed/Torque Mod	88	Spd Mode & Limits
Start At PowerUp	168	Restart Modes
Start Inhibits	214	Diagnostics
Start Mask	277	Masks & Owners
Start Owner	289	Masks & Owners
Start/Acc Boost	69	Volts per Hertz
Status X @ Fault	227, 228	Diagnostics
Stop Mode A	155	Stop/Brake Modes
Stop Mode B	156	Stop/Brake Modes
Stop Owner	288	Masks & Owners
Stop/BRK Mode A	155	Stop/Brake Modes
Stop/BRK Mode B	156	Stop/Brake Modes
SV Boost Filter	59	Torq Attributes
TB Man Ref Hi	97	Speed Reference
TB Man Ref Lo	98	Speed Reference
TB Man Ref Sel	96	Speed Reference
Testpoint X Data	235, 237	Diagnostics
Testpoint X Sel	234, 236	Diagnostics
Torq Ref A Div	430	Torq Attributes
Torque Current	4	Metering
Torque Perf Mode	53	Torq Attributes
Torque Ref X Sel	427, 431	Torq Attributes
Torque Ref X Hi	428, 432	Torq Attributes
Torque Ref X Lo	429, 433	Torq Attributes
Torque Setpoint	435	Torq Attributes
Torque Ref B Mult	434	Torq Attributes
Total Inertia	450	Spd Regulator
Trim Hi	119	Speed Trim
Trim In Select	117	Speed Trim
Trim Lo	120	Speed Trim
Trim Out Select	118	Speed Trim
Voltage Class	202	Drive Memory
Wake Level	180	Restart Modes
Wake Time	181	Restart Modes

Parameter Cross Reference – by Number

Number	Parameter Name	Group
1	Output Freq	Metering
2	Commanded Freq	Metering
	Commanded Speed	Metering
3	Output Current	Metering
4	Torque Current	Metering
5	Flux Current	Metering
6	Output Voltage	Metering
7	Output Power	Metering
8	Output Powr Fctr	Metering
9	Elapsed MWh	Metering
10	Elapsed Run Time	Metering
11	MOP Frequency	Metering
	MOP Reference	Metering
12	DC Bus Voltage	Metering
13	DC Bus Memory	Metering
16	Analog In1 Value	Metering
17	Analog In2 Value	Metering
22	Ramped Speed	Metering
23	Speed Reference	Metering
24	Commanded Torque	Metering
25	Speed Feedback	Metering
26	Rated kW	Drive Data
27	Rated Volts	Drive Data
28	Rated Amps	Drive Data
29	Control SW Ver	Drive Data
40	Motor Type	Motor Data
41	Motor NP Volts	Motor Data
42	Motor NP FLA	Motor Data
43	Motor NP Hertz	Motor Data
44	Motor NP RPM	Motor Data
45	Motor NP Power	Motor Data
46	Mtr NP Pwr Units	Motor Data
47	Motor OL Hertz	Motor Data
48	Motor OL Factor	Motor Data
49	Motor Poles	Motor Data
53	Motor Cntl Sel	Torq Attributes
	Torque Perf Mode	Torq Attributes
54	Maximum Voltage	Torq Attributes
55	Maximum Freq	Torq Attributes
56	Compensation	Torq Attributes
57	Flux Up Mode	Torq Attributes
58	Flux Up Time	Torq Attributes
59	SV Boost Filter	Torq Attributes
61	Autotune	Torq Attributes
62	IR Voltage Drop	Torq Attributes
63	Flux Current Ref	Torq Attributes
64	Ixo Voltage Drop	Torq Attributes
66	Autotune Torque	Torq Attributes
67	Inertia Autotune	Torq Attributes
69	Start/Acc Boost	Volts per Hertz
70	Run Boost	Volts per Hertz
71	Break Voltage	Volts per Hertz

Number	Parameter Name	Group
72	Break Frequency	Volts per Hertz
79	Speed Units	Spd Mode & Limits
80	Feedback Select	Spd Mode & Limits
	Speed Mode	Spd Mode & Limits
81	Minimum Speed	Spd Mode & Limits
82	Maximum Speed	Spd Mode & Limits
83	Overspeed Limit	Spd Mode & Limits
84-86	Skip Frequency X	Spd Mode & Limits
87	Skip Freq Band	Spd Mode & Limits
88	Speed/Torque Mod	Spd Mode & Limits
90, 93	Speed Ref X Sel	Speed Reference
91, 94	Speed Ref X Hi	Speed Reference
92, 95	Speed Ref X Lo	Speed Reference
96	TB Man Ref Sel	Speed Reference
97	TB Man Ref Hi	Speed Reference
98	TB Man Ref Lo	Speed Reference
99	Pulse Input Ref	Speed Reference
100	Jog Speed	Discrete Speeds
	Jog Speed 1	Discrete Speeds
101-107	Preset Speed X	Discrete Speeds
108	Jog Speed 2	Discrete Speeds
117	Trim In Select	Speed Trim
118	Trim Out Select	Speed Trim
119	Trim Hi	Speed Trim
120	Trim Lo	Speed Trim
121	Slip RPM @ FLA	Slip Comp
122	Slip Comp Gain	Slip Comp
123	Slip RPM Meter	Slip Comp
124	PI Configuration	Process PI
125	PI Control	Process PI
126	PI Reference Sel	Process PI
127	PI Setpoint	Process PI
128	PI Feedback Sel	Process PI
129	PI Integral Time	Process PI
130	PI Prop Gain	Process PI
131	PI Lower Limit	Process PI
132	PI Upper Limit	Process PI
133	PI Preload	Process PI
134	PI Status	Process PI
135	PI Ref Meter	Process PI
136	PI Fdback Meter	Process PI
137	PI Error Meter	Process PI
138	PI Output Meter	Process PI
140, 141	Accel Time X	Ramp Rates
142, 143	Decel Time X	Ramp Rates
146	S Curve %	Ramp Rates
147	Current Lmt Sel	Load Limits
148	Current Lmt Val	Load Limits
149	Current Lmt Gain	Load Limits
150	Drive OL Mode	Load Limits
151	PWM Frequency	Load Limits
152	Droop RPM @ FLA	Load Limits

Number	Parameter Name	Group
153	Regen Power Limit	Load Limits
154	Current Rate Limit	Load Limits
155, 156	Stop Mode X	Stop/Brake Modes
	Stop/BRK Mode X	Stop/Brake Modes
157	DC Brk Lvl Sel	Stop/Brake Modes
158	DC Brake Level	Stop/Brake Modes
159	DC Brake Time	Stop/Brake Modes
160	Bus Reg Ki	Stop/Brake Modes
161, 162	Bus Reg Mode X	Stop/Brake Modes
163	DB Resistor Type	Stop/Brake Modes
164	Bus Reg Kp	Stop/Brake Modes
165	Bus Reg Kd	Stop/Brake Modes
166	Flux Braking	Stop/Brake Modes
167	Powerup Delay	Restart Modes
168	Start At PowerUp	Restart Modes
169	Flying Start En	Restart Modes
170	Flying StartGain	Restart Modes
174	Auto Rstrt Tries	Restart Modes
175	Auto Rstrt Delay	Restart Modes
178	Sleep-Wake Mode	Restart Modes
179	Sleep-Wake Ref	Restart Modes
180	Wake Level	Restart Modes
181	Wake Time	Restart Modes
182	Sleep Level	Restart Modes
183	Sleep Time	Restart Modes
184	Power Loss Mode	Power Loss
185	Power Loss Time	Power Loss
186	Power Loss Level	Power Loss
190	Direction Mode	Direction Config
192	Save HIM Ref	HIM Ref Config
193	Man Ref Preload	HIM Ref Config
194	Save MOP Ref	MOP Config
195	MOP Rate	MOP Config
196	Param Access Lvl	Drive Memory
197	Reset To Defalts	Drive Memory
198	Load Frm Usr Set	Drive Memory
199	Save To User Set	Drive Memory
200	Reset Meters	Drive Memory
201	Language	Drive Memory
202	Voltage Class	Drive Memory
203	Drive Checksum	Drive Memory
209, 210	Drive Status X	Diagnostics
211, 212	Drive Alarm X	Diagnostics
213	Speed Ref Source	Diagnostics
214	Start Inhibits	Diagnostics
215	Last Stop Source	Diagnostics
216	Dig In Status	Diagnostics
217	Dig Out Status	Diagnostics
218	Drive Temp	Diagnostics
219	Drive OL Count	Diagnostics
220	Motor OL Count	Diagnostics
224	Fault Frequency	Diagnostics
	Fault Speed	Diagnostics
225	Fault Amps	Diagnostics
226	Fault Bus Volts	Diagnostics
227, 228	Status X @ Fault	Diagnostics

Number	Parameter Name	Group
229, 230	Alarm X @ Fault	Diagnostics
234, 236	Testpoint X Sel	Diagnostics
235, 237	Testpoint X Data	Diagnostics
238	Fault Config 1	Faults
240	Fault Clear	Faults
241	Fault Clear Mode	Faults
242	Power Up Marker	Faults
243	Fault 1 Code	Faults
244	Fault 1 Time	Faults
245	Fault 2 Code	Faults
246	Fault 2 Time	Faults
247	Fault 3 Code	Faults
248	Fault 3 Time	Faults
249	Fault 4 Code	Faults
250	Fault 4 Time	Faults
251	Fault 5 Code	Faults
252	Fault 5 Time	Faults
253	Fault 6 Code	Faults
254	Fault 6 Time	Faults
255	Fault 7 Code	Faults
256	Fault 7 Time	Faults
257	Fault 8 Code	Faults
258	Fault 8 Time	Faults
259	Alarm Config 1	Alarms
261	Alarm Clear	Alarms
262-269	Alarm X Code	Alarms
270	DPI Baud Rate	Comm Control
	DPI Data Rate	Comm Control
271	Drive Logic Rslt	Comm Control
272	Drive Ref Rslt	Comm Control
273	Drive Ramp Rslt	Comm Control
274	DPI Port Sel	Comm Control
275	DPI Port Value	Comm Control
276	Logic Mask	Masks & Owners
277	Start Mask	Masks & Owners
278	Jog Mask	Masks & Owners
279	Direction Mask	Masks & Owners
280	Reference Mask	Masks & Owners
281	Accel Mask	Masks & Owners
282	Decel Mask	Masks & Owners
283	Fault Clr Mask	Masks & Owners
284	MOP Mask	Masks & Owners
285	Local Mask	Masks & Owners
288	Stop Owner	Masks & Owners
289	Start Owner	Masks & Owners
290	Jog Owner	Masks & Owners
291	Direction Owner	Masks & Owners
292	Reference Owner	Masks & Owners
293	Accel Owner	Masks & Owners
294	Decel Owner	Masks & Owners
295	Fault Clr Owner	Masks & Owners
296	MOP Owner	Masks & Owners
297	Local Owner	Masks & Owners
300-307	Data In XX	Datalinks
310-317	Data Out XX	Datalinks
320	Anlg In Config	Analog Inputs

Number	Parameter Name	Group
321	Anlg In Sqr Root	Analog Inputs
322, 325	Analog In X Hi	Analog Inputs
323, 326	Analog In X Lo	Analog Inputs
324, 327	Analog In X Loss	Analog Inputs
340	Anlg Out Config	Analog Outputs
341	Anlg Out Absolut	Analog Outputs
342, 345	Analog OutX Sel	Analog Outputs
343, 346	Analog OutX Hi	Analog Outputs
344, 347	Analog OutX Lo	Analog Outputs
361-366	Digital InX Sel	Digital Inputs
380, 384, 388	Digital OutX Sel	Digital Outputs
381, 385, 389	Dig OutX Level	Digital Outputs
382, 386, 390	Dig OutX OnTime	Digital Outputs
383, 387, 391	Dig OutX OffTime	Digital Outputs
412	Motor Fdbk Type	Speed Feedback
413	Encoder PPR	Speed Feedback
414	Enc Position Fdbk	Speed Feedback
415	Encoder Speed	Speed Feedback
416	Fdbk Filter Sel	Speed Feedback
419	Notch Filter Freq	Speed Feedback
420	Notch Filter K	Speed Feedback
421	Marker Pulse	Speed Feedback
422	Pulse In Scale	Speed Feedback
423	Encoder Z Chan	Speed Feedback
427, 431	Torque Ref X Sel	Torq Attributes
428, 432	Torque Ref X Hi	Torq Attributes
429, 433	Torque Ref X Lo	Torq Attributes
430	Torq Ref A Div	Torq Attributes
434	Torque Ref B Mult	Torq Attributes
435	Torque Setpoint	Torq Attributes
436	Pos Torque Limit	Torq Attributes
437	Neg Torque Limit	Torq Attributes
440	Control Status	Torq Attributes
441	Mtr Tor Cur Ref	Torq Attributes
445	Ki Speed Loop	Speed Regulator
446	Kp Speed Loop	Speed Regulator
447	Kf Speed Loop	Speed Regulator
449	Speed Desired BW	Speed Regulator
450	Total Inertia	Speed Regulator
454	Rev Speed Limit	Speed Regulator
460	PI Reference Hi	Process PI
461	PI Reference Lo	Process PI
462	PI Feedback Hi	Process PI
463	PI Feedback Lo	Process PI
476, 482	ScaleX In Value	Scaled Blocks
477, 483	ScaleX In Hi	Scaled Blocks
478, 484	ScaleX In Lo	Scaled Blocks
479, 485	ScaleX Out Hi	Scaled Blocks
480, 486	ScaleX Out Lo	Scaled Blocks
481, 487	ScaleX Out Value	Scaled Blocks

Notes:

Troubleshooting

Chapter 4 provides information to guide you in troubleshooting the PowerFlex 700. Included is a listing and description of drive faults (with possible solutions, when applicable) and alarms.

For information on...	See page...
Faults and Alarms	4-1
Drive Status	4-2
Manually Clearing Faults	4-3
Fault Descriptions	4-4
Clearing Alarms	4-9
Alarm Descriptions	4-9
Common Symptoms and Corrective Actions	4-11
Testpoint Codes and Functions	4-13

Faults and Alarms

A fault is a condition that stops the drive. There are three fault types.

Type	Fault Description	
①	Auto-Reset Run	When this type of fault occurs, and [Auto Rstrt Tries] (see page 3-31) is set to a value greater than "0," a user-configurable timer, [Auto Rstrt Delay] (see page 3-31) begins. When the timer reaches zero, the drive attempts to automatically reset the fault. If the condition that caused the fault is no longer present, the fault will be reset and the drive will be restarted.
②	Non-Resettable	This type of fault normally requires drive or motor repair. The cause of the fault must be corrected before the fault can be cleared. The fault will be reset on power up after repair.
③	User Configurable	These faults can be enabled/disabled to annunciate or ignore a fault condition.

An alarm is a condition that, if left untreated, may stop the drive. There are two alarm types.

Type	Alarm Description	
①	User Configurable	These alarms can be enabled or disabled through [Alarm Config 1] on page 3-42.
②	Non-Configurable	These alarms are always enabled.

Drive Status

The condition or state of your drive is constantly monitored. Any changes will be indicated through the LEDs and/or the HIM (if present).

Front Panel LED Indications

Figure 4.1 Drive Status Indicators

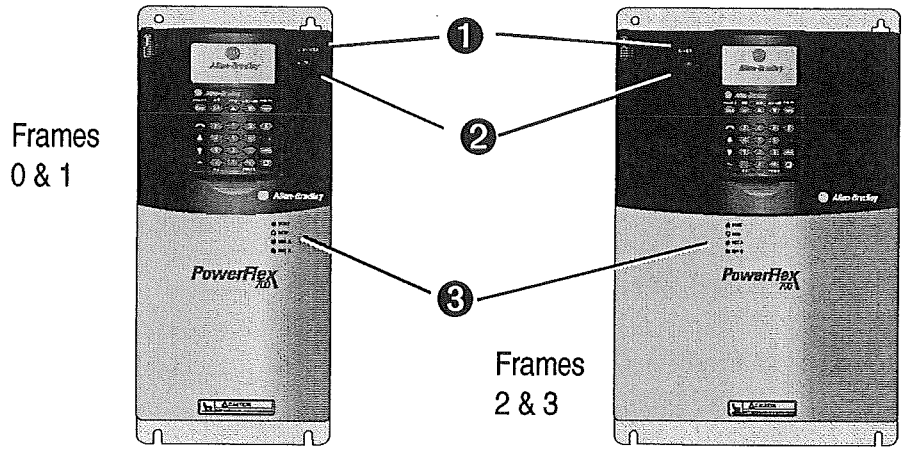

#	Name	Color	State	Description
1	PWR (Power)	Green	Steady	Illuminates when power is applied to the drive.
2	STS (Status)	Green	Flashing	Drive ready, but not running & no faults are present.
			Steady	Drive running, no faults are present.
		Yellow	Flashing	A type 2 (non-configurable) alarm condition exists, drive continues to run.
			Steady	A type 1 (user configurable) alarm condition exists, but drive continues to run.
		Red	Flashing	Fault has occurred. Check [Fault x Code] or Fault Queue.
			Steady	A non-resettable fault has occurred.
3	PORT	Green	–	Status of DPI port internal communications (if present).
	MOD	Yellow	–	Status of communications module (when installed).
	NET A	Red	–	Status of network (if connected).
	NET B	Red	–	Status of secondary network (if connected).

Precharge Board LED Indications

Frame 5 Precharge Board LED indicators are located above the "Line Type" jumper shown in Figure 1.2.

Name	Color	State	Description
Power	Green	Steady	Indicates when precharge board power supply is operational
Alarm	Yellow	Steady	Indicates one of the following alarms(1) occurred causing the precharge to momentarily stop firing: Line Loss, Low Phase (single-phase dropped below 80% of line voltage), Input frequency out of range (momentarily)
Fault	Red	Steady	Indicates one of the following faults(2): DC Bus short, DC Bus not charged, Input frequency out of range, or Overtemperature

(1) An alarm condition automatically resets when the condition no longer exists

(2) A fault indicates a malfunction that must be corrected and can only be reset after cycling power.

HIM Indication

The LCD HIM also provides visual notification of a fault or alarm condition.

Condition	Display
Drive is indicating a fault. The LCD HIM immediately reports the fault condition by displaying the following. • "Faulted" appears in the status line • Fault number • Fault name • Time that has passed since fault occurred Press Esc to regain HIM control.	F-> Faulted Auto – Fault – F 5 OverVoltage Time Since Fault 0000:23:52
Drive is indicating an alarm. The LCD HIM immediately reports the alarm condition by displaying the following. • Alarm name (Type 2 alarms only) • Alarm bell graphic	F-> Power Loss Auto 0.0 Hz Main Menu: Diagnostics Parameter Device Select

Manually Clearing Faults

Step	Key(s)
1. Press Esc to acknowledge the fault. The fault information will be removed so that you can use the HIM.	Esc
2. Address the condition that caused the fault. The cause must be corrected before the fault can be cleared.	
3. After corrective action has been taken, clear the fault by <u>one</u> of these methods. • Press Stop • Cycle drive power • Set parameter 240 [Fault Clear] to "1." • "Clear Faults" on the HIM Diagnostic menu.	

Fault Descriptions

Table 4.A Fault Types, Descriptions and Actions

Fault	No.	Type[1]	Description	Action
Analog In Loss	29	① ③	An analog input is configured to fault on signal loss. A signal loss has occurred. Configure with [Anlg In 1, 2 Loss] on page 3-48.	1. Check parameters. 2. Check for broken/loose connections at inputs.
Anlg Cal Chksum	108		The checksum read from the analog calibration data does not match the checksum calculated.	Replace drive.
Auto Rstrt Tries	33	③	Drive unsuccessfully attempted to reset a fault and resume running for the programmed number of [Flt RstRun Tries]. Enable/Disable with [Fault Config 1] on page 3-40.	Correct the cause of the fault and manually clear.
AutoTune Aborted	80		Autotune function was canceled by the user or a fault occurred.	Restart procedure.
Auxiliary Input	2	①	Auxiliary input interlock is open.	Check remote wiring.
Cntl Bd Overtemp **Vector**	55		The temperature sensor on the Main Control Board detected excessive heat.	1. Check Main Control Board fan. 2. Check surrounding air temperature. 3. Verify proper mounting/cooling.
DB Resistance	69		Resistance of the internal DB resistor is out of range.	Replace resistor.
Decel Inhibit	24	③	The drive is not following a commanded deceleration because it is attempting to limit bus voltage.	1. Verify input voltage is within drive specified limits. 2. Verify system ground impedance follows proper grounding techniques. 3. Disable bus regulation and/or add dynamic brake resistor and/or extend deceleration time.
Drive OverLoad	64		Drive rating of 110% for 1 minute or 150% for 3 seconds has been exceeded.	Reduce load or extend Accel Time.
Drive Powerup	49		No fault displayed. Used as a Power Up Marker in the Fault Queue indicating that the drive power has been cycled.	
Excessive Load	79		Motor did not come up to speed in the allotted time during autotune.	1. Uncouple load from motor. 2. Repeat Autotune.
Encoder Loss	91		Requires differential encoder. One of the 2 encoder channel signals is missing.	1. Check Wiring. 2. Replace encoder.
Encoder Quad Err	90		Both encoder channels changed state within one clock cycle.	1. Check for externally induced noise. 2. Replace encoder.

Fault	No.	Type(1)	Description	Action
Faults Cleared	52		No fault displayed. Used as a marker in the Fault Queue indicating that the fault clear function was performed.	
Flt QueueCleared	51		No fault displayed. Used as a marker in the Fault Queue indicating that the clear queue function was performed.	
FluxAmpsRef Rang	78		The value for flux amps determined by the Autotune procedure exceeds the programmed [Motor NP FLA].	1. Reprogram [Motor NP FLA] with the correct motor nameplate value. 2. Repeat Autotune.
Ground Fault	13	①	A current path to earth ground greater than 25% of drive rating.	Check the motor and external wiring to the drive output terminals for a grounded condition.
Hardware Fault	93		Hardware enable is disabled (jumpered high) but logic pin is still low.	1. Check jumper. 2. Replace Main Control Board.
Hardware Fault	130		Gate array load error.	1. Cycle power. 2. Replace Main Control Board.
Hardware Fault	131		Dual port failure.	1. Cycle power. 2. Replace Main Control Board.
Heatsink OvrTemp	8	①	Heatsink temperature exceeds 100% of [Drive Temp].	1. Verify that maximum ambient temperature has not been exceeded. 2. Check fan. 3. Check for excess load.
HW OverCurrent	12	①	The drive output current has exceeded the hardware current limit.	Check programming. Check for excess load, improper DC boost setting, DC brake volts set too high or other causes of excess current.
Incompat MCB-PB	106	②	Drive rating information stored on the power board is incompatible with the main control board.	Load compatible version files into drive.
I/O Comm Loss	121		I/O Board lost communications with the Main Control Board.	Check connector. Check for induced noise. Replace I/O board or Main Control Board.
I/O Failure	122		I/O was detected, but failed the powerup sequence. I/O Board is separate in Standard & integral in Vector Control.	Replace I/O Board (Standard Control) or Main Control Board (Vector Control).
I/O Mismatch **Standard**	120		I/O board configuration not the same from last time drive was powered up.	Verify configuration.
IR Volts Range	77		"Calculate" is the autotune default and the value determined by the autotune procedure for IR Drop Volts is not in the range of acceptable values.	Re-enter motor nameplate data.

Fault	No.	Type(1)	Description	Action
IXo VoltageRange	87		Voltage calculated for motor inductive impedance exceeds 25% of [Motor NP Volts].	1. Check for proper motor sizing. 2. Check for correct programming of [Motor NP Volts], parameter 41. 3. Additional output impedance may be required.
Motor Overload	7	① ③	Internal electronic overload trip. Enable/Disable with [Fault Config 1] on page 3-40.	An excessive motor load exists. Reduce load so drive output current does not exceed the current set by [Motor NP FLA].
NVS I/O Checksum	109		EEprom checksum error.	1. Cycle power and repeat function. 2. Replace Main Control Board.
NVS I/O Failure	110		EEprom I/O error.	1. Cycle power and repeat function. 2. Replace Main Control Board.
OverSpeed Limit	25	①	Functions such as Slip Compensation or Bus Regulation have attempted to add an output frequency adjustment greater than that programmed in [Overspeed Limit].	Remove excessive load or overhauling conditions or increase [Overspeed Limit].
OverVoltage	5	①	DC bus voltage exceeded maximum value.	Monitor the AC line for high line voltage or transient conditions. Bus overvoltage can also be caused by motor regeneration. Extend the decel time or install dynamic brake option.
Parameter Chksum	100	②	The checksum read from the board does not match the checksum calculated.	1. Restore defaults. 2. Reload User Set if used.
Params Defaulted	48		The drive was commanded to write default values to EEPROM.	1. Clear the fault or cycle power to the drive. 2. Program the drive parameters as needed.
Phase U to Grnd	38		A phase to ground fault has been detected between the drive and motor in this phase.	1. Check the wiring between the drive and motor. 2. Check motor for grounded phase. 3. Replace drive.
Phase V to Grnd	39			
Phase W to Grnd	40			
Phase UV Short	41		Excessive current has been detected between these two output terminals.	1. Check the motor and drive output terminal wiring for a shorted condition. 2. Replace drive.
Phase VW Short	42			
Phase UW Short	43			

Fault	No.	Type(1)	Description	Action
Port 1-5 DPI Loss	81-85		DPI port stopped communicating. A SCANport device was connected to a drive operating DPI devices at 500k baud.	1. If adapter was not intentionally disconnected, check wiring to the port. Replace wiring, port expander, adapters, Main Control Board or complete drive as required. 2. Check HIM connection. 3. If an adapter was intentionally disconnected and the [Logic Mask] bit for that adapter is set to "1", this fault will occur. To disable this fault, set the [Logic Mask] bit for the adapter to "0."
Port 1-5 Adapter	71-75		The communications card has a fault.	1. Check DPI device event queue and corresponding fault information for the device.
Power Loss	3	① ③	DC bus voltage remained below 85% of nominal for longer than [Power Loss Time]. Enable/ Disable with [Fault Config 1] on page 3-40.	Monitor the incoming AC line for low voltage or line power interruption.
Power Unit	70		One or more of the output transistors were operating in the active region instead of desaturation. This can be caused by excessive transistor current or insufficient base drive voltage.	1. Check for damaged output transistors. 2. Replace drive.
Pulse In Loss	92		Z Channel is selected as a pulse input and no signal is present.	1. Check wiring. 2. Replace pulse generator.
Pwr Brd Chksum1	104		The checksum read from the EEPROM does not match the checksum calculated from the EEPROM data.	Clear the fault or cycle power to the drive.
Pwr Brd Chksum2	105	②	The checksum read from the board does not match the checksum calculated.	1. Cycle power to the drive. 2. If problem persists, replace drive.
Replaced MCB-PB	107	②	Main Control Board was replaced and parameters were not programmed.	1. Restore defaults. 2. Reprogram parameters.
Shear Pin	63	③	Programmed [Current Lmt Val] has been exceeded. Enable/ Disable with [Fault Config 1] on page 3-40.	Check load requirements and [Current Lmt Val] setting.
Software Fault	88		Microprocessor handshake error.	Replace Main Control Board.
Software Fault	89		Microprocessor handshake error.	Replace Main Control Board.

Fault	No.	Type(1)	Description	Action
SW OverCurrent	36	①	Drive output current has exceeded the 1ms current rating. This rating is greater than the 3 second current rating and less than the hardware overcurrent fault level. It is typically 200-250% of the drive continuous rating	Check for excess load, improper DC boost setting. DC brake volts set too high.
Trnsistr OvrTemp	9	①	Output transistors have exceeded their maximum operating temperature.	1. Verify that maximum ambient temperature has not been exceeded. 2. Check fan. 3. Check for excess load.
UnderVoltage	4	① ③	DC bus voltage fell below the minimum value of 407V DC at 400/480V input or 204V DC at 200/240V input. Enable/Disable with [Fault Config 1] (page 3-40).	Monitor the incoming AC line for low voltage or power interruption.
UserSet1 Chksum	101	②	The checksum read from the user set does not match the checksum calculated.	Re-save user set.
UserSet2 Chksum	102	②		
UserSet3 Chksum	103	②		

(1) See page 4-1 for a description of fault types.

Table 4.B Fault Cross Reference

No.(1)	Fault	No.(1)	Fault	No.(1)	Fault
2	Auxiliary Input	42	Phase VW Short	88	Software Fault
3	Power Loss	43	Phase UW Short	89	Software Fault
4	UnderVoltage	48	Params Defaulted	90	Encoder Quad Err
5	OverVoltage	49	Drive Powerup	91	Encoder Loss
7	Motor Overload	51	Flt QueueCleared	92	Pulse In Loss
8	Heatsink OvrTemp	52	Faults Cleared	93	Hardware Fault
9	Trnsistr OvrTemp	55	Cntl Bd Overtemp	100	Parameter Chksum
12	HW OverCurrent	63	Shear Pin	101-103	UserSet Chksum
13	Ground Fault	64	Drive OverLoad	104	Pwr Brd Chksum1
24	Decel Inhibit	69	DB Resistance	105	Pwr Brd Chksum2
25	OverSpeed Limit	70	Power Unit	106	Incompat MCB-PB
29	Analog In Loss	71-75	Port 1-5 Adapter	107	Replaced MCB-PB
33	Auto Rstrt Tries	77	IR Volts Range	108	Anlg Cal Chksum
36	SW OverCurrent	78	FluxAmpsRef Rang	120	I/O Mismatch
38	Phase U to Grnd	79	Excessive Load	121	I/O Comm Loss
39	Phase V to Grnd	80	AutoTune Aborted	122	I/O Failure
40	Phase W to Grnd	81-85	Port 1-5 DPI Loss	130	Hardware Fault
41	Phase UV Short	87	IXo VoltageRange	131	Hardware Fault

(1) Fault numbers not listed are reserved for future use.

Clearing Alarms

Alarms are automatically cleared when the condition that caused the alarm is no longer present.

Alarm Descriptions

Table 4.C Alarm Descriptions and Actions

Alarm	No.	Type(1)	Description
Analog In Loss	5	①	An analog input is configured for "Alarm" on signal loss and signal loss has occurred.
Bipolar Conflict	20	②	Parameter 190 [Direction Mode] is set to "Bipolar" or "Reverse Dis" and one or more of the following digital input functions is configured: "Fwd/Reverse," "Run Forward," "Run Reverse," "Jog Forward" or "Jog Reverse."
Decel Inhibt	10	①	Drive is being inhibited from decelerating.
Dig In ConflictA	17	②	Digital input functions are in conflict. Combinations marked with a "✱" will cause an alarm.

** Jog 1 and Jog 2 with Vector Control Option*

	Acc2/Dec2	Accel 2	Decel 2	Jog*	Jog Fwd	Jog Rev	Fwd/Rev
Acc2 / Dec2		✱	✱				
Accel 2	✱						
Decel 2	✱						
Jog*					✱	✱	
Jog Fwd				✱			✱
Jog Rev				✱			✱
Fwd/Rev					✱	✱	

Alarm	No.	Type(1)	Description
Dig In ConflictB	18	②	A digital Start input has been configured without a Stop input or other functions are in conflict. Combinations that conflict are marked with a "✱" and will cause an alarm.

** Jog 1 and Jog 2 with Vector Control Option*

	Start	Stop-CF	Run	Run Fwd	Run Rev	Jog*	Jog Fwd	Jog Rev	Fwd/Rev
Start			✱	✱	✱		✱	✱	
Stop-CF									
Run	✱			✱	✱		✱	✱	
Run Fwd	✱		✱			✱			✱
Run Rev	✱		✱			✱			✱
Jog*				✱	✱				
Jog Fwd	✱		✱						
Jog Rev	✱		✱						
Fwd/Rev				✱	✱				

Alarm	No.	Type[1]	Description
Dig In ConflictC	19	②	More than one physical input has been configured to the same input function. Multiple configurations are not allowed for the following input functions. Forward/Reverse, Run Reverse, Bus Regulation Mode B Speed Select 1, Jog Forward, Acc2 / Dec2 Speed Select 2, Jog Reverse, Accel 2 Speed Select 3, Run, Decel 2 Run Forward, Stop Mode B
Drive OL Level 1	8	①	The calculated IGBT temperature requires a reduction in PWM frequency. If [Drive OL Mode] is disabled and the load is not reduced, an overload fault will eventually occur.
Drive OL Level 2	9	①	The calculated IGBT temperature requires a reduction in Current Limit. If [Drive OL Mode] is disabled and the load is not reduced, an overload fault will eventually occur.
FluxAmpsRef Rang	26	②	The calculated or measured Flux Amps value is not within the expected range. Verify motor data and rerun motor tests.
IntDBRes OvrHeat	6	①	The drive has temporarily disabled the DB regulator because the resistor temperature has exceeded a predetermined value.
IR Volts Range	25	②	The drive auto tuning default is "Calculate" and the value calculated for IR Drop Volts is not in the range of acceptable values. This alarm should clear when all motor nameplate data is properly entered.
Ixo Vlt Rang	28	②	Motor leakage inductance is out of range.
MaxFreq Conflict	23	②	The sum of [Maximum Speed] and [Overspeed Limit] exceeds [Maximum Freq]. Raise [Maximum Freq] or lower [Maximum Speed] and/or [Overspeed Limit] so that the sum is less than or equal to [Maximum Freq].
Motor Type Cflct	21	②	[Motor Type] has been set to "Synchr Reluc" or "Synchr PM" and one or more of the following exist: • [Torque Perf Mode] = "Sensrls Vect," "SV Economize" or "Fan/Pmp V/Hz." • [Flux Up Time] is greater than 0.0 Secs. • [Speed Mode] is set to "Slip Comp." • [Autotune] = "Static Tune" or "Rotate Tune."
NP Hz Conflict	22	②	Fan/pump mode is selected in [Torq Perf Mode] and the ratio of [Motor NP Hertz] to [Maximum Freq] is greater than 26.
Power Loss	3	①	Drive has sensed a power line loss.
Precharge Active	1	①	Drive is in the initial DC bus precharge state.
Sleep Config	29	②	Sleep/Wake configuration error. With [Sleep-Wake Mode] = "Direct," possible causes include: drive is stopped and [Wake Level] < [Sleep Level]. "Stop=CF," "Run," "Run Forward," or "Run Reverse." is not configured in [Digital Inx Sel].
Speed Ref Cflct	27	②	[Speed Ref x Sel] or [PI Reference Sel] is set to "Reserved".
Start At PowerUp	4	①	[Start At PowerUp] is enabled. Drive may start at any time within 10 seconds of drive powerup.
UnderVoltage	2	①	The bus voltage has dropped below a predetermined value.
VHz Neg Slope	24	②	[Torq Perf Mode] = "Custom V/Hz" & the V/Hz slope is negative.
Waking	11	①	The Wake timer is counting toward a value that will start the drive.

(1) See page 4-1 for a description of alarm types.

Table 4.D Alarm Cross Reference

No.(1)	Alarm	No.(1)	Alarm	No.(1)	Alarm
1	Precharge Active	10	Decel Inhibt	23	MaxFreq Conflict
2	UnderVoltage	11	Waking	24	VHz Neg Slope
3	Power Loss	17	Dig In ConflictA	25	IR Volts Range
4	Start At PowerUp	18	Dig In ConflictB	26	FluxAmpsRef Rang
5	Analog In Loss	19	Dig In ConflictC	27	Speed Ref Cflct
6	IntDBRes OvrHeat	20	Bipolar Conflict	28	Ixo Vlt Rang
8	Drive OL Level 1	21	Motor Type Cflct	29	Sleep Config
9	Drive OL Level 2	22	NP Hz Conflict		

(1) Alarm numbers not listed are reserved for future use.

Common Symptoms and Corrective Actions

Drive does not Start from Start or Run Inputs wired to the terminal block.

Cause(s)	Indication	Corrective Action
Drive is Faulted	Flashing red status light	Clear fault. • Press Stop • Cycle power • Set [Fault Clear] to 1 (See page 3-41) • "Clear Faults" on the HIM Diagnostic menu.
Incorrect input wiring. See pages 1-20 & 1-21 for wiring examples. • 2 wire control requires Run, Run Forward, Run Reverse or Jog input. • 3 wire control requires Start and Stop inputs • Jumper from terminal 25 to 26 is required.	None	Wire inputs correctly and/or install jumper.
Incorrect digital input programming. • Mutually exclusive choices have been made (i.e., Jog and Jog Forward). • 2 wire and 3 wire programming may be conflicting. • Exclusive functions (i.e, direction control) may have multiple inputs configured. • Stop is factory default and is not wired.	None	Program [Digital Inx Sel] for correct inputs. (See page 3-50) Start or Run programming may be missing.
	Flashing yellow status light and "DigIn CflctB" indication on LCD HIM. [Drive Status 2] shows type 2 alarm(s).	Program [Digital Inx Sel] to resolve conflicts. (See page 3-50) Remove multiple selections for the same function. Install stop button to apply a signal at stop terminal.

Drive does not Start from HIM.

Cause(s)	Indication	Corrective Action
Drive is programmed for 2 wire control. HIM Start button is disabled for 2 wire control.	None	If 2 wire control is required, no action needed. If 3 wire control is required, program [Digital Inx Sel] for correct inputs. (See page 3-50)

Drive does not respond to changes in speed command.

Cause(s)	Indication	Corrective Action
No value is coming from the source of the command.	LCD HIM Status Line indicates "At Speed" and output is 0 Hz.	1. If the source is an analog input, check wiring and use a meter to check for presence of signal. 2. Check [Commanded Freq] for correct source. (See page 3-10)
Incorrect reference source has been programmed.	None	3. Check [Speed Ref Source] for the source of the speed reference. (See page 3-37) 4. Reprogram [Speed Ref A Sel] for correct source. (See page 3-21)
Incorrect Reference source is being selected via remote device or digital inputs.	None	5. Check [Drive Status 1], page 3-36, bits 12 and 13 for unexpected source selections. 6. Check [Dig In Status], page 3-38 to see if inputs are selecting an alternate source. 7. Reprogram digital inputs to correct "Speed Sel x" option. (See page 3-50)

Motor and/or drive will not accelerate to commanded speed.

Cause(s)	Indication	Corrective Action
Acceleration time is excessive.	None	Reprogram [Accel Time x]. (See page 3-27)
Excess load or short acceleration times force the drive into current limit, slowing or stopping acceleration.	None	Check [Drive Status 2], bit 10 to see if the drive is in Current Limit. (See page 3-36) Remove excess load or reprogram [Accel Time x].(See page 3-27)
Speed command source or value is not as expected.	None	Check for the proper Speed Command using Steps 1 through 7 above.
Programming is preventing the drive output from exceeding limiting values.	None	Check [Maximum Speed] (See page 3-19) and [Maximum Freq] (See page 3-13) to assure that speed is not limited by programming.

Motor operation is unstable.

Cause(s)	Indication	Corrective Action
Motor data was incorrectly entered or Autotune was not performed.	None	1. Correctly enter motor nameplate data. 2. Perform "Static" or "Rotate" Autotune procedure. (Param #061, page 3-15)

Drive will not reverse motor direction.

Cause(s)	Indication	Corrective Action
Digital input is not selected for reversing control.	None	Check [Digital Inx Sel], page 3-50. Choose correct input and program for reversing mode.
Digital input is incorrectly wired.	None	Check input wiring. (See page 1-15)
Direction mode parameter is incorrectly programmed.	None	Reprogram [Direction Mode], page 3-34 for analog "Bipolar" or digital "Unipolar" control.
Motor wiring is improperly phased for reverse.	None	Switch two motor leads.

Cause(s)	Indication	Corrective Action
A bipolar analog speed command input is incorrectly wired or signal is absent.	None	1. Use meter to check that an analog input voltage is present. 2. Check wiring. (See page 1-15) Positive voltage commands forward direction. Negative voltage commands reverse direction.

Stopping the drive results in a Decel Inhibit fault.

Cause(s)	Indication	Corrective Action
The bus regulation feature is enabled and is halting deceleration due to excessive bus voltage. Excess bus voltage is normally due to excessive regenerated energy or unstable AC line input voltages. Internal timer has halted drive operation.	Decel Inhibit fault screen. LCD Status Line indicates "Faulted".	1. See Attention statement on Preface-4. 2. Reprogram parameters 161/162 to eliminate any "Adjust Freq" selection. 3. Disable bus regulation (parameters 161 & 162) and add a dynamic brake. 4. Correct AC input line instability or add an isolation transformer. 5. Reset drive.

Testpoint Codes and Functions

Select testpoint with [Testpoint x Sel], parameters 234/236. Values can be viewed with [Testpoint x Data], parameters 235/237.

No.(1)	Description	Units	Values		
			Minimum	Maximum	Default
01	DPI Error Status	1	0	255	0
02	Heatsink Temp	0.1 degC	–100.0	100.0	0
03	Active Cur Limit	1	0	32767	0
04	Active PWM Freq	1 Hz	2	10	4
05	Life MegaWatt Hr(2)	0.1 MWh	0	429496729.5	0
06	Life Run Time	0.0001 Hrs	0	429496.7295	0
07	Life Pwr Up Time	0.0001 Hrs	0	429496.7295	0
08	Life Pwr Cycles	1	0	429496729.5	0
09	Life MW-HR Fract(2)	1	0	4294967295	0
10	MW-HR Frac Unit(2)	1	0	4294967295	0
12	Raw Analog In 1	1	0		0
13	Raw Analog In 2	1	0		0
16	CS Msg Rx Cnt	1	0	65535	0
17	CS Msg Tx Cnt	1	0	65535	0
18	CS Timeout Cnt	1	0	255	0
19	CS Msg Bad Cnt	1	0	255	0
22	PC Msg Rx Cnt	1	0	65535	0
23	PC Msg Tx Cnt	1	0	65535	0
24-29	PC1-6 Timeout Cnt	1	0	255	0
30	CAN BusOff Cnt	1	0	65535	0

No.(1)	Description	Units	Values		
			Minimum	Maximum	Default
31	No. of Analog Inputs	1	0		0
32	Raw Temperature	1	0		0
33	MTO Norm Mtr Amp	0.1 Amps	0	65535	0
34	DTO-Cmd DC Hold	1	0	32767	0

(1) Enter in [Testpoint x Sel].

(2) Use the equation below to calculate total Lifetime MegaWatt Hours.

$$\left(\frac{\text{Value of Code 9}}{\text{Value of Code 10}} \times 0.1\right) + \text{Value of Code 5} = \text{Total Lifetime MegaWatt Hours}$$

Supplemental Drive Information

For information on . .	See page . .
Specifications	A-1
Communication Configurations	A-3
Output Devices	A-6
Drive, Fuse & Circuit Breaker Ratings	A-6
Dimensions	A-11
Frame Cross Reference	A-18

Specifications

Category	Specification						
Protection	**Drive**	**200-208V**	**240V**	**380/400**	**480V**	**600V**	**690V**
	AC Input Overvoltage Trip:	247VAC	285VAC	475VAC	570VAC	690VAC	
	AC Input Undervoltage Trip:	120VAC	138VAC	233VAC	280VAC	345VAC	
	Bus Overvoltage Trip:	405VDC	405VDC	810VDC	810VDC	1013VDC	
	Bus Undervoltage Shutoff/Fault:	153VDC	153VDC	305VDC	305VDC	381VDC	
	Nominal Bus Voltage:	281VDC	324VDC	540VDC	648VDC	810VDC	
	All Drives						
	Heat Sink Thermistor:	Monitored by microprocessor overtemp trip					
	Drive Overcurrent Trip Software Overcurrent Trip: Hardware Overcurrent Trip:	 200% of rated current (typical) 220-300% of rated current (dependent on drive rating)					
	Line transients:	up to 6000 volts peak per IEEE C62.41-1991					
	Control Logic Noise Immunity:	Showering arc transients up to 1500V peak					
	Power Ride-Thru:	15 milliseconds at full load					
	Logic Control Ride-Thru:	0.5 seconds minimum, 2 seconds typical					
	Ground Fault Trip:	Phase-to-ground on drive output					
	Short Circuit Trip:	Phase-to-phase on drive output					
Environment	Altitude:	1000 m (3300 ft) max. without derating					
	Maximum Surrounding Air Temperature without Derating: Open Type: IP20: NEMA Type 1: IP56, NEMA Type 4X	 0 to 50 degrees C (32 to 122 degrees F) 0 to 50 degrees C (32 to 122 degrees F) 0 to 40 degrees C (32 to 104 degrees F) 0 to 40 degrees C (32 to 104 degrees F)					
	Storage Temperature (all const.):	–40 to 70 degrees C (–40 to 158 degrees F)					
	Atmosphere	**Important:** Drive **must not** be installed in an area where the ambient atmosphere contains volatile or corrosive gas, vapors or dust. If the drive is not going to be installed for a period of time, it must be stored in an area where it will not be exposed to a corrosive atmosphere.					
	Relative Humidity:	5 to 95% non-condensing					
	Shock:	15G peak for 11ms duration (±1.0 ms)					
	Vibration:	0.152 mm (0.006 in.) displacement, 1G peak					

Category	Specification	
Agency Certification	The drive is designed to meet the following specifications: NFPA 70 - US National Electrical Code NEMA ICS 3.1 - Safety standards for Construction and Guide for Selection, Installation and Operation of Adjustable Speed Drive Systems. NEMA 250 - Enclosures for Electrical Equipment IEC 146 - International Electrical Code.	
	c UL us	UL and cUL Listed to UL508C and CAN/CSA-C2.2 No. 14-M91
	CE	Marked for all applicable European Directives(1) EMC Directive (89/336/EEC) Emissions EN 61800-3 Adjustable Speed electrical power drive systems Part 3 Immunity EN 61800-3 Second Environment, Restricted Distribution Low Voltage Directive (73/23/EEC) EN 50178 Electronic Equipment for use in Power Installations
Electrical	Voltage Tolerance:	–10% of minimum, +10% of maximum.
	Frequency Tolerance:	47-63 Hz.
	Input Phases:	Three-phase input provides full rating for all drives. Single-phase operation provides 50% of rated current.
	Displacement Power Factor:	0.98 across speed range.
	Efficiency:	97.5% at rated amps, nominal line volts.
	Maximum Short Circuit Rating:	200,000 Amps symmetrical.
	Actual Short Circuit Rating:	Determined by AIC rating of installed fuse/circuit breaker.
Control	Method:	Sine coded PWM with programmable carrier frequency. Ratings apply to all drives. The drive can be supplied as 6 pulse or 12 pulse in a configured package.
	Carrier Frequency:	2, 4, 8 & 10 kHz. Drive rating based on 4 kHz
	Output Voltage Range:	0 to rated motor voltage
	Output Frequency Range:	Standard Control – 0 to 400 Hz., Vector Control – 0 to 420 Hz.
	Frequency Accuracy Digital Input: Analog Input:	 Within ±0.01% of set output frequency. Within ±0.4% of maximum output frequency.
	Speed Regulation - Open Loop with Slip Compensation:	±0.5% of base speed across a 40:1 speed range.
	Selectable Motor Control:	Sensorless Vector with full tuning. Standard V/Hz with full custom capability and vector control.
	Stop Modes:	Multiple programmable stop modes including - Ramp, Coast, DC-Brake, Ramp-to-Hold and S-curve.
	Accel/Decel:	Two independently programmable accel & decel times. Each time may be programmed from 0-3600 seconds in 0.1 sec. increments
	Intermittent Overload:	110% Overload capability for up to 1 minute 150% Overload capability for up to 3 seconds
	Current Limit Capability:	Proactive Current Limit programmable from 20 to 160% of rated output current. Independently programmable proportional and integral gain.
	Electronic Motor Overload Protection:	Class 10 protection with speed sensitive response. Investigated by U.L. to comply with N.E.C. Article 430. U.L. File E59272, volume 12.

Category	Specification	
Encoder	Type:	Incremental, dual channel
	Supply:	12V, 500 mA. 12V, 10 mA minimum inputs isolated with differential transmitter, 250 kHz maximum.
	Quadrature:	90° +/–27° at 25° C.
	Duty Cycle:	50% +10%
	Requirements:	Encoders must be line driver type, quadrature (dual channel) or pulse (single channel), 8-15V DC output, single-ended or differential and capable of supplying a minimum of 10 mA per channel. Maximum input frequency is 250 kHz. The Encoder Interface Board accepts 12V DC square-wave with a minimum high state voltage of 7.0V DC (12 volt encoder). Maximum low state voltage is 0.4V DC.

(1) Applied noise impulses may be counted in addition to the standard pulse train causing erroneously high [Pulse Freq] readings.

Communication Configurations

Typical Programmable Controller Configurations

Important: If block transfers are programmed to continuously write information to the drive, care must be taken to properly format the block transfer. If attribute 10 is selected for the block transfer, values will be written only to RAM and will not be saved by the drive. This is the preferred attribute for continuous transfers. If attribute 9 is selected, each program scan will complete a write to the drives non-volatile memory (EEprom). Since the EEprom has a fixed number of allowed writes, continuous block transfers will quickly damage the EEprom. Do Not assign attribute 9 to continuous block transfers. Refer to the individual communications adapter User Manual for additional details.

Logic Command/Status Words

Figure A.1 Logic Command Word

Logic Bits																	
15	14	13	12	11	10	9	8	7	6	5	4	3	2	1	0	**Command**	**Description**
															x	Stop(1)	0 = Not Stop 1 = Stop
														x		Start(1)(2)	0 = Not Start 1 = Start
													x			Jog	0 = Not Jog 1 = Jog
												x				Clear Faults	0 = Not Clear Faults 1 = Clear Faults
										x	x					Direction	00 = No Command 01 = Forward Command 10 = Reverse Command 11 = Hold Present Direction
									x							Local Control	0 = No Local Control 1 = Local Control
								x								MOP Increment	0 = Not Increment 1 = Increment
						x	x									Accel Rate	00 = No Command 01 = Use Accel Time 1 10 = Use Accel Time 2 11 = Use Present Time
				x	x											Decel Rate	00 = No Command 01 = Use Decel Time 1 10 = Use Decel Time 2 11 = Use Present Time
	x	x	x													Reference Select(3)	000 = No Command 001 = Ref. 1 (Ref A Select) 010 = Ref. 2 (Ref B Select) 011 = Ref. 3 (Preset 3) 100 = Ref. 4 (Preset 4) 101 = Ref. 5 (Preset 5) 110 = Ref. 6 (Preset 6) 111 = Ref. 7 (Preset 7)
x																MOP Decrement	0 = Not Decrement 1 = Decrement

(1) A "0 = Not Stop" condition (logic 0) must first be present before a "1 = Start" condition will start the drive. The Start command acts as a momentary Start command. A "1" will start the drive, but returning to "0" will not stop the drive.

(2) This Start will not function if a digital input (parameters 361-366) is programmed for 2-Wire Control (option 7, 8 or 9).

(3) This Reference Select will not function if a digital input (parameters 361-366) is programmed for "Speed Sel 1, 2 or 3" (option 15, 16 or 17). Note that Reference Selection is "Exclusive Ownership" see [Reference Owner] on page 3-45.

Figure A.2 Logic Status Word

Logic Bits																Status	Description
15	14	13	12	11	10	9	8	7	6	5	4	3	2	1	0		
															x	Ready	0 = Not Ready 1 = Ready
														x		Active	0 = Not Active 1 = Active
													x			Command Direction	0 = Reverse 1 = Forward
												x				Actual Direction	0 = Reverse 1 = Forward
											x					Accel	0 = Not Accelerating 1 = Accelerating
										x						Decel	0 = Not Decelerating 1 = Decelerating
									x							Alarm	0 = No Alarm 1 = Alarm
								x								Fault	0 = No Fault 1 = Fault
							x									At Speed	0 = Not At Reference 1 = At Reference
				x	x	x										Local Control(1)	000 = Port 0 (TB) 001 = Port 1 010 = Port 2 011 = Port 3 100 = Port 4 101 = Port 5 110 = Reserved 111 = No Local
x	x	x	x													Reference Source	0000 = Ref A Auto 0001 = Ref B Auto 0010 = Preset 2 Auto 0011 = Preset 3 Auto 0100 = Preset 4 Auto 0101 = Preset 5 Auto 0110 = Preset 6 Auto 0111 = Preset 7 Auto 1000 = Term Blk Manual 1001 = DPI 1 Manual 1010 = DPI 2 Manual 1011 = DPI 3 Manual 1100 = DPI 4 Manual 1101 = DPI 5 Manual 1110 = Reserved 1111 = Jog Ref

(1) See "Owners" on page 3-44 for further information.

Output Devices

Common mode cores are internal to the drive. For information on output devices such as output contactors, cable terminators and output reactors refer to the *PowerFlex Reference Manual.*

Drive, Fuse & Circuit Breaker Ratings

The tables on the following pages provide drive ratings (including continuous, 1 minute and 3 second) and recommended AC line input fuse and circuit breaker information. Both types of short circuit protection are acceptable for UL and IEC requirements. Sizes listed are the recommended sizes based on 40 degree C and the U.S. N.E.C. Other country, state or local codes may require different ratings.

Fusing

If fuses are chosen as the desired protection method, refer to the recommended types listed below. If available amp ratings do not match the tables provided, the closest fuse rating that exceeds the drive rating should be chosen.

- IEC – BS88 (British Standard) Parts 1 & 2[1], EN60269-1, Parts 1 & 2, type gG or equivalent should be used.
- UL – UL Class CC, T, RK1 or J must be used.

Circuit Breakers

The "non-fuse" listings in the following tables include both circuit breakers (inverse time or instantaneous trip) and 140M Self-Protecting Motor Starters. **If one of these is chosen as the desired protection method,** the following requirements apply.

- IEC and UL – Both types of devices are acceptable for IEC and UL installations.

(1) Typical designations include, but may not be limited to the following; Parts 1 & 2: AC, AD, BC, BD, CD, DD, ED, EFS, EF, FF, FG, GF, GG, GH.

Table A.A 208/240 Volt AC Input Recommended Protection Devices (See page A-10 for Notes)

Drive Catalog Number	Frame	HP Rating		Input Ratings		Output Amps			Dual Element Time Delay Fuse		Non-Time Delay Fuse		Circuit Breaker (3)	Motor Circuit Protector (4)	140M Motor Starter with Adjustable Current Range (5)(6)			
		ND	HD	Amps	kVA	Cont.	1 Min.	3 Sec.	Min. (1)	Max. (2)	Min. (1)	Max. (2)	Amps	Amps	Available Catalog Numbers (7)			
208 Volt AC Input																		
20BB2P2	0	0.5	0.33	1.9	0.7	2.5	2.8	3.8	3	6	3	10	15	3	140M-C2E-B25	140M-D8E-B25	–	–
20BB4P2	0	1	0.75	3.7	1.3	4.8	5.6	7.0	6	10	6	17.5	15	7	140M-C2E-B63	140M-D8E-B63	–	–
20BB6P8	1	2	1.5	6.8	2.4	7.8	10.4	13.8	10	15	10	30	30	15	140M-C2E-C10	140M-D8E-C10	140M-F8E-C10	–
20BB9P6	1	3	2	9.5	3.4	11	12.1	17	12	20	12	40	40	15	140M-C2E-C16	140M-D8E-C16	140M-F8E-C16	–
20BB015	1	5	3	15.7	5.7	17.5	19.3	26.3	20	35	20	70	70	30	140M-C2E-C20	140M-D8E-C20	140M-F8E-C20	–
20BB022	1	7.5	5	23.0	8.3	25.3	27.8	38	30	50	30	100	100	30	140M-C2E-C25	140M-D8E-C25	140M-F8E-C25	140M-CMN-2500
20BB028	2	10	7.5	29.6	10.7	32.2	38	50.6	40	70	40	125	125	50	–	–	140M-F8E-C32	140M-CMN-4000
20BB042	3	15	10	44.5	16.0	48.3	53.1	72.5	60	100	60	175	175	70	–	–	140M-F8E-C45	140M-CMN-6300
20BB052	3	20	15	51.5	17.1	56	64	86	80	125	80	200	200	100	–	–	–	140M-CMN-6300
20BB104	5	–	30	84.7	28	92	138	175	125	200	125	350	300	150	–	–	–	140M-CMN-9000
		40	–	113	37.5	120	132	175	150	250	150	475	350	150	–	–	–	–
20BB130	5	–	40	98	32.4	104	156	175	125	225	125	400	300	150	–	–	–	–
		50	–	122	40.6	130	143	175	175	275	175	500	375	250	–	–	–	–
240 Volt AC Input																		
20BB2P2	0	0.5	0.33	1.7	0.7	2.2	2.4	3.3	3	6	3	10	15	3	140M-C2E-B25	140M-D8E-B25	–	–
20BB4P2	0	1	0.75	3.3	1.4	4.2	4.8	6.4	5	8	5	15	15	7	140M-C2E-B63	140M-D8E-B63	–	–
20BB6P8	1	2	1.5	5.9	2.4	6.8	9	12	10	15	10	25	25	15	140M-C2E-C10	140M-D8E-C10	140M-F8E-C10	–
20BB9P6	1	3	2	8.3	3.4	9.6	10.6	14.4	12	20	12	35	35	15	140M-C2E-C10	140M-D8E-C10	140M-F8E-C10	–
20BB015	1	5	3	13.7	5.7	15.3	16.8	23	20	30	20	60	60	30	140M-C2E-C16	140M-D8E-C16	140M-F8E-C16	–
20BB022	1	7.5	5	19.9	8.3	22	24.2	33	25	50	25	80	80	30	140M-C2E-C25	140M-D8E-C25	140M-F8E-C25	140M-CMN-2500
20BB028	2	10	7.5	25.7	10.7	28	33	44	35	60	35	100	100	50	–	–	140M-F8E-C32	140M-CMN-4000
20BB042	3	15	10	38.5	16.0	42	46.2	63	50	90	50	150	150	50	–	–	140M-F8E-C45	140M-CMN-6300
20BB052	3	20	15	47.7	18.2	52	63	80	60	100	60	200	200	100	–	–	–	140M-CMN-6300
20BB104	5	–	30	73	28	80	120	160	100	175	100	300	300	100	–	–	–	140M-CMN-9000
		40	–	98	37.3	104	115	175	125	225	125	400	300	150	–	–	–	–
20BB130	5	–	40	98	37.3	104	156	175	125	225	125	400	300	150	–	–	–	–
		50	–	122	47	130	143	175	175	275	175	500	375	250	–	–	–	–

Table A.B 400 Volt AC Input Recommended Protection Devices (See page A-10 for Notes)

Drive Catalog Number	Frame	kW Rating		Input Ratings		Output Amps			Dual Element Time Delay Fuse		Non-Time Delay Fuse		Circuit Breaker(3)	Motor Circuit Protector(4)	140M Motor Starter with Adjustable Current Range(5)(6)			
		ND	*HD*	*Amps*	*kVA*	*Cont.*	*1 Min.*	*3 Sec.*	*Min.(1)*	*Max.(2)*	*Min.(1)*	*Max.(2)*	*Amps*	*Amps*	*Available Catalog Numbers(7)*			
400 Volt AC Input																		
20BC1P3	0	0.37	0.25	1.1	0.77	1.3	1.4	1.9	3	3	3	6	15	3	140M-C2E-B16	–	–	–
20BC2P1	0	0.75	0.55	1.8	1.3	2.1	2.4	3.2	3	6	3	8	15	3	140M-C2E-B25	140M-D8E-B25	–	–
20BC3P5	0	1.5	0.75	3.2	2.2	3.5	4.5	6.0	6	7	6	12	15	7	140M-C2E-B40	140M-D8E-B40	–	–
20BC5P0	0	2.2	1.5	4.6	3.2	5.0	5.5	7.5	6	10	6	20	20	7	140M-C2E-B63	140M-D8E-B63	–	–
20BC8P7	0	4	2.2	7.9	5.5	8.7	9.9	13.2	15	17.5	15	30	30	15	140M-C2E-C10	140M-D8E-C10	140M-F8E-C10	–
20BC011	0	5.5	4	10.8	7.5	11.5	13	17.4	15	25	15	45	45	15	140M-C2E-C16	140M-D8E-C16	140M-F8E-C16	–
20BC015	1	7.5	5.5	14.4	10.0	15.4	17.2	23.1	20	30	20	60	60	20	140M-C2E-C20	140M-D8E-C20	140M-F8E-C20	–
20BC022	1	11	7.5	20.6	14.3	22	24.2	33	30	45	30	80	80	30	140M-C2E-C25	140M-D8E-C25	140M-F8E-C25	–
20BC030	2	15	11	28.4	19.7	30	33	45	35	60	35	120	120	50	–	–	140M-F8E-C32	–
20BC037	3	18.5	15	35.0	24.3	37	45	60	45	80	45	125	125	50	–	–	140M-F8E-C45	–
20BC043	3	22	18.5	40.7	28.2	43	56	74	60	90	60	150	150	60	–	–	–	–
20BC056	3	30	22	53	36.7	56	64	86	70	125	70	200	200	100	–	–	–	–
20BC072	3	37	30	68.9	47.8	72	84	112	90	150	90	250	250	100	–	–	–	–
20BC085(8)	4	–	37	68.9	47.8	72	108	144	110	175	110	300	300	150	–	–	–	–
		45	–	81.4	56.4	85	94	128	110	175	110	300	300	150	–	–	–	–
20BC105	5	–	45	81.4	56.4	85	128	170	110	175	110	300	300	150	–	–	–	–
		55	–	100.5	69.6	105	116	158	125	225	125	400	300	150	–	–	–	–
20BC125	5	–	45	91.9	63.7	96	144	168	125	200	125	375	375	150	–	–	–	–
		55	–	121.1	83.9	125	138	163	150	275	150	500	375	250	–	–	–	–
20BC140	6	–	55	101	76	105	158	210	150	225	150	400	300	150	–	–	–	–
		75	–	136	103	140	154	210	200	300	200	550	400	250	–	–	–	–
20BC170	6	–	75	136	103	140	210	280	200	300	200	550	400	250	–	–	–	–
		90	–	164	126	170	187	255	250	375	250	600	500	250	–	–	–	–
20BC205(9)	6	–	90	164	126	170	255	313	250	375	250	600	500	250	–	–	–	–
		110	–	199	148	205	220	289	275	450	275	600	600	400	–	–	–	–

Table A.C 480 Volt AC Input Recommended Protection Devices (See page A-10 for Notes)

Drive Catalog Number	Frame	HP Rating		Input Ratings		Output Amps			Dual Element Time Delay Fuse		Non-Time Delay Fuse		Circuit Breaker (3)	Motor Circuit Protector (4)	140M Motor Starter with Adjustable Current Range (5)(6)			
		ND	HD	Amps	kVA	Cont.	1 Min.	3 Sec.	Min. (1)	Max. (2)	Min. (1)	Max. (2)	Amps	Amps	Available Catalog Numbers (7)			
480 Volt AC Input																		
20BD1P1	0	0.5	0.33	0.9	0.7	1.1	1.2	1.6	3	3	3	6	15	3	140M-C2E-B16	–	–	–
20BD2P1	0	1	0.75	1.6	1.4	2.1	2.4	3.2	3	6	3	8	15	3	140M-C2E-B25	–	–	–
20BD3P4	0	2	1.5	2.6	2.2	3.4	4.5	6.0	4	8	4	12	15	7	140M-C2E-B40	140M-D8E-B40	–	–
20BD5P0	0	3	2	3.9	3.2	5.0	5.5	7.5	6	10	6	20	20	7	140M-C2E-C63	140M-D8E-B63	–	–
20BD8P0	0	5	3	6.9	5.7	8.0	8.8	12	10	15	10	30	30	15	140M-C2E-C10	140M-D8E-C10	140M-F8E-C10	–
20BD011	0	7.5	5	9.5	7.9	11	12.1	16.5	15	20	15	40	40	15	140M-C2E-C16	140M-D8E-C16	140M-F8E-C16	–
20BD014	1	10	7.5	12.5	10.4	14	16.5	22	17.5	30	17.5	50	50	20	140M-C2E-C16	140M-D8E-C16	140M-F8E-C16	–
20BD022	1	15	10	19.9	16.6	22	24.2	33	25	50	25	80	80	30	140M-C2E-C25	140M-D8E-C25	140M-F8E-C25	140-CMN-2500
20BD027	2	20	15	24.8	20.6	27	33	44	35	60	35	100	100	50	–	–	140M-F8E-C32	140-CMN-4000
20BD034	2	25	20	31.2	25.9	34	40.5	54	40	70	40	125	125	50	–	–	140M-F8E-C45	140-CMN-4000
20BD040	3	30	25	36.7	30.5	40	51	68	50	90	50	150	150	50	–	–	140M-F8E-C45	140-CMN-4000
20BD052	3	40	30	47.7	39.7	52	60	80	60	110	60	200	200	70	–	–	–	140M-CMN-6300
20BD065	3	50	40	59.6	49.6	65	78	104	75	125	75	250	250	100	–	–	–	140M-CMN-9000
20BD077	4	–	50	59.6	49.6	65	98	130	100	170	100	300	300	100	–	–	–	140M-CMN-9000
		60	–	72.3	60.1	77	85	116	100	170	100	300	300	100	–	–	–	140M-CMN-9000
20BD096	5	–	60	72.3	60.1	77	116	154	100	170	100	300	300	100	–	–	–	140M-CMN-9000
		75	–	90.1	74.9	96	106	144	125	200	125	350	350	125	–	–	–	–
20BD125	5	–	75	90.1	74.9	96	144	168	125	200	125	350	350	125	–	–	–	–
		100	–	117	97.6	125	138	163	150	250	150	500	375	150	–	–	–	–
20BD156	6	–	100	131	109	125	188	250	175	250	175	500	375	250	–	–	–	–
		125	–	147	122	156	172	234	200	350	200	600	450	250	–	–	–	–
20BD180	6	–	125	147	122	156	234	312	200	350	200	600	450	250	–	–	–	–
		150	–	169	141	180	198	270	225	400	225	600	500	250	–	–	–	–

Table A.D 600 Volt AC Input Recommended Protection Devices

Drive Catalog Number	Frame	HP Rating		Input Ratings		Output Amps			Dual Element Time Delay Fuse		Non-Time Delay Fuse		Circuit Breaker (3)	Motor Circuit Protector (4)	140M Motor Starter with Adjustable Current Range (5)(6)			
		ND	HD	Amps	kVA	Cont.	1 Min.	3 Sec.	Min. (1)	Max. (2)	Min. (1)	Max. (2)	Amps	Amps	Available Catalog Numbers (7)			
600 Volt AC Input																		
20BE011	1	10	7.5	9.9	10.2	11	13.5	18	15	25	15	40	40	15	–	–	–	–
20BE017	1	15	10	15.4	16.0	17	18.7	25.5	20	40	20	60	60	20	–	–	–	–
20BE022	2	20	15	20.2	21.0	22	25.5	34	30	50	30	80	80	30	–	–	–	–
20BE027	2	25	20	24.8	25.7	27	33	44	35	60	35	100	100	50	–	–	–	–
20BE032	3	30	25	29.4	30.5	32	40.5	54	40	70	40	125	125	50	–	–	–	–
20BE041	3	40	30	37.6	39.1	41	48	64	50	90	50	150	150	50	–	–	–	–
20BE052	3	50	40	47.7	49.6	52	61.5	82	60	110	60	200	200	100	–	–	–	–

Notes:

(1) Minimum protection device size is the lowest rated device that supplies maximum protection without nuisance tripping.

(2) Maximum protection device size is the highest rated device that supplies drive protection. For US NEC, minimum size is 125% of motor FLA. Ratings shown are maximum.

(3) Circuit Breaker - inverse time breaker. For US NEC, minimum size is 125% of motor FLA. Ratings shown are maximum.

(4) Motor Circuit Protector - instantaneous trip circuit breaker. For US NEC minimum size is 125% of motor FLA. Ratings shown are maximum.

(5) Bulletin 140M with adjustable current range should have the current trip set to the minimum range that the device will not trip.

(6) Manual Self-Protected (Type E) Combination Motor Controller, UL listed for 208 Wye or Delta, 240 Wye or Delta, 480Y/277 or 600Y/ 347. Not UL listed for use on 480V or 600V Delta/Delta systems.

(7) The AIC ratings of the Bulletin 140M Motor Protector may vary. See publication 140M-SG001B-EN-P.

(8) 20BC085 current rating is limited to 45 degrees C ambient.

(9) 20BC205 current rating is limited to 40 degrees C ambient.

Dimensions

Figure A.3 PowerFlex 700 Frames 0-3 *(0 Frame Shown)*

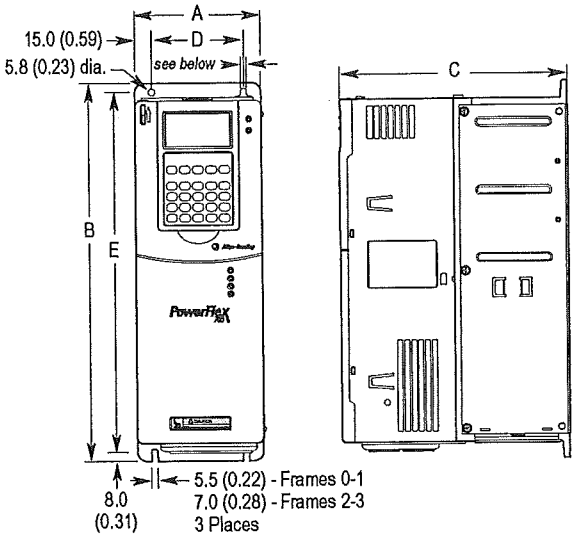

Dimensions are in millimeters and (inches).

Frame (1)	A	B	C	D	E	Weight (2) *kg (lbs.)*	
						Drive	Drive & Packaging
0	110.0 (4.33)	336.0 (13.23)	200.0 (7.87)	80.0 (3.15)	320.0 (12.60)	5.22 (11.5)	8.16 (18)
1	135.0 (5.31)	336.0 (13.23)	200.0 (7.87)	105.0 (4.13)	320.0 (12.60)	7.03 (15.5)	9.98 (22)
2	222.0 (8.74)	342.5 (13.48)	200.0 (7.87)	192.0 (7.56)	320.0 (12.60)	12.52 (27.6)	15.20 (33.5)
3	222.0 (8.74)	517.5 (20.37)	200.0 (7.87)	192.0 (7.56)	500.0 (19.69)	18.55 (40.9)	22.68 (50)

(1) Refer to Table A.E for frame information.

(2) Weights include HIM and Standard I/O.

Figure A.4 PowerFlex 700 Frame 4

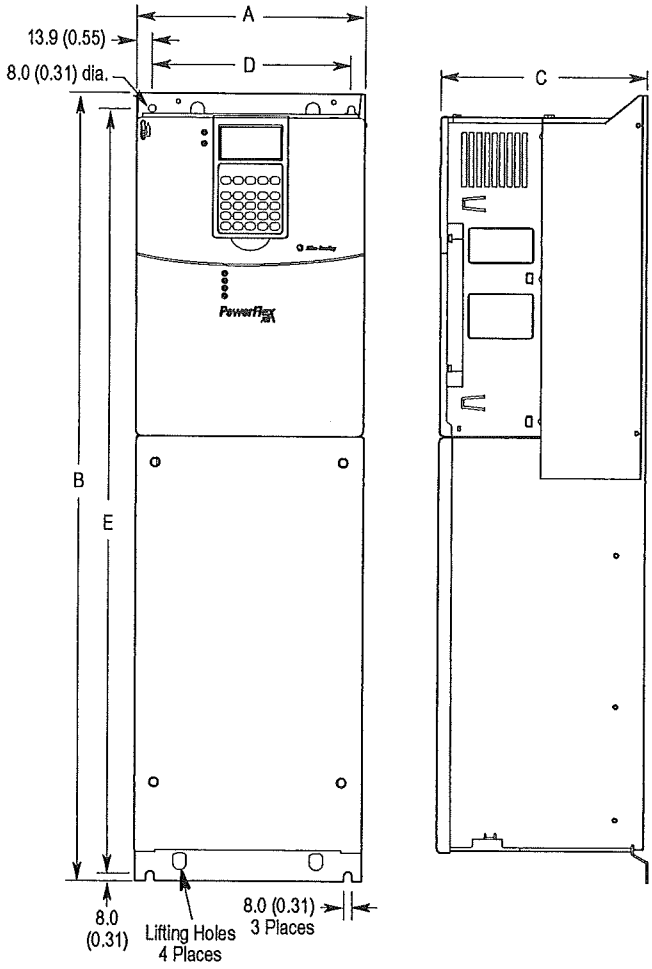

Dimensions are in millimeters and (inches)

Frame(1)	A *(Max.)*	B	C *(Max.)*	D	E	Approx. Weight(2) *kg (lbs.)*	
						Drive	Drive & Packaging
4	219.8 (8.65)	758.9 (29.88)	201.6 (7.94)	192.0 (7.56)	738.2 (29.06)	24.49 (54.0)	29.03 (64.0)

(1) Refer to Table A.E for frame information.

(2) Weights include HIM and Standard I/O.

Figure A.5 PowerFlex 700 Frame 5

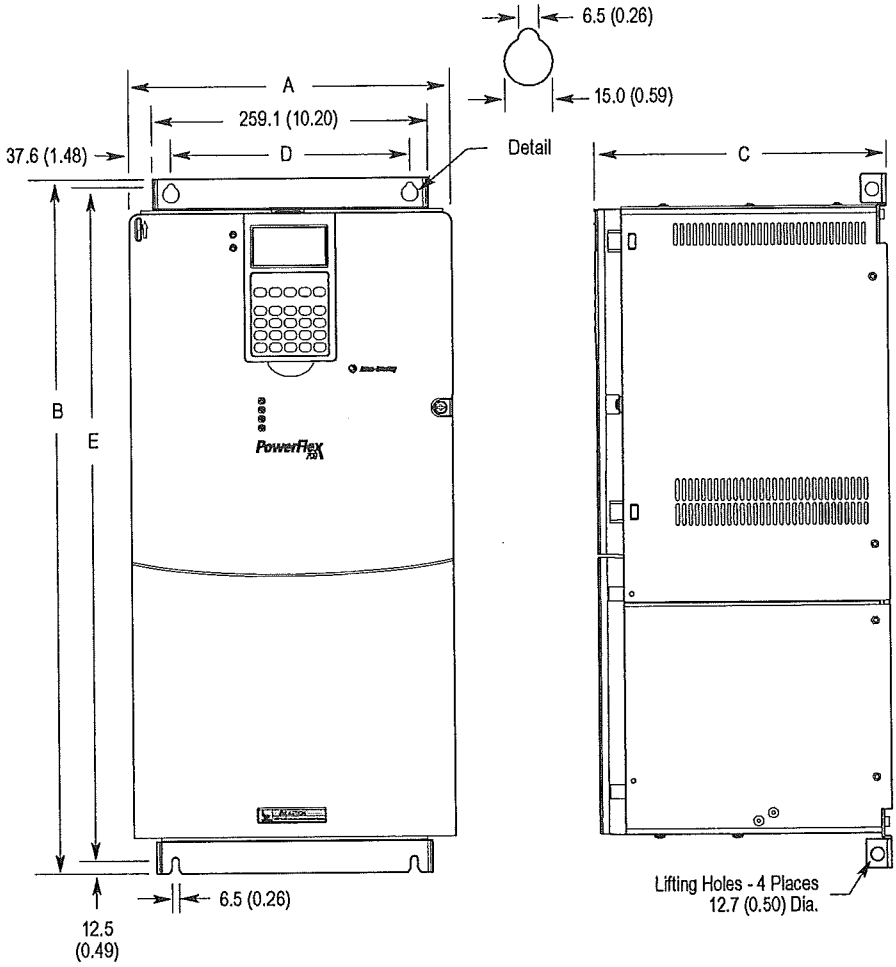

Dimensions are in millimeters and (inches).

Frame(1)	A *(Max.)*	B	C *(Max.)*	D	E	Approx. Weight(2) *kg (lbs.)*	
						Drive	Drive & Packaging
5	308.9 (12.16)	644.5 (25.37)(3)	275.4 (10.84)	225.0 (8.86)	625.0 (24.61)	37.19 (82.0)	42.18 (93.0)

(1) Refer to Table A.E for frame information.

(2) Weights include HIM and Standard I/O.

(3) When using the supplied junction box (100 HP drives Only), add an additional 45.1 mm (1.78 in.) to this dimension.

Figure A.6 PowerFlex 700 Frame 6

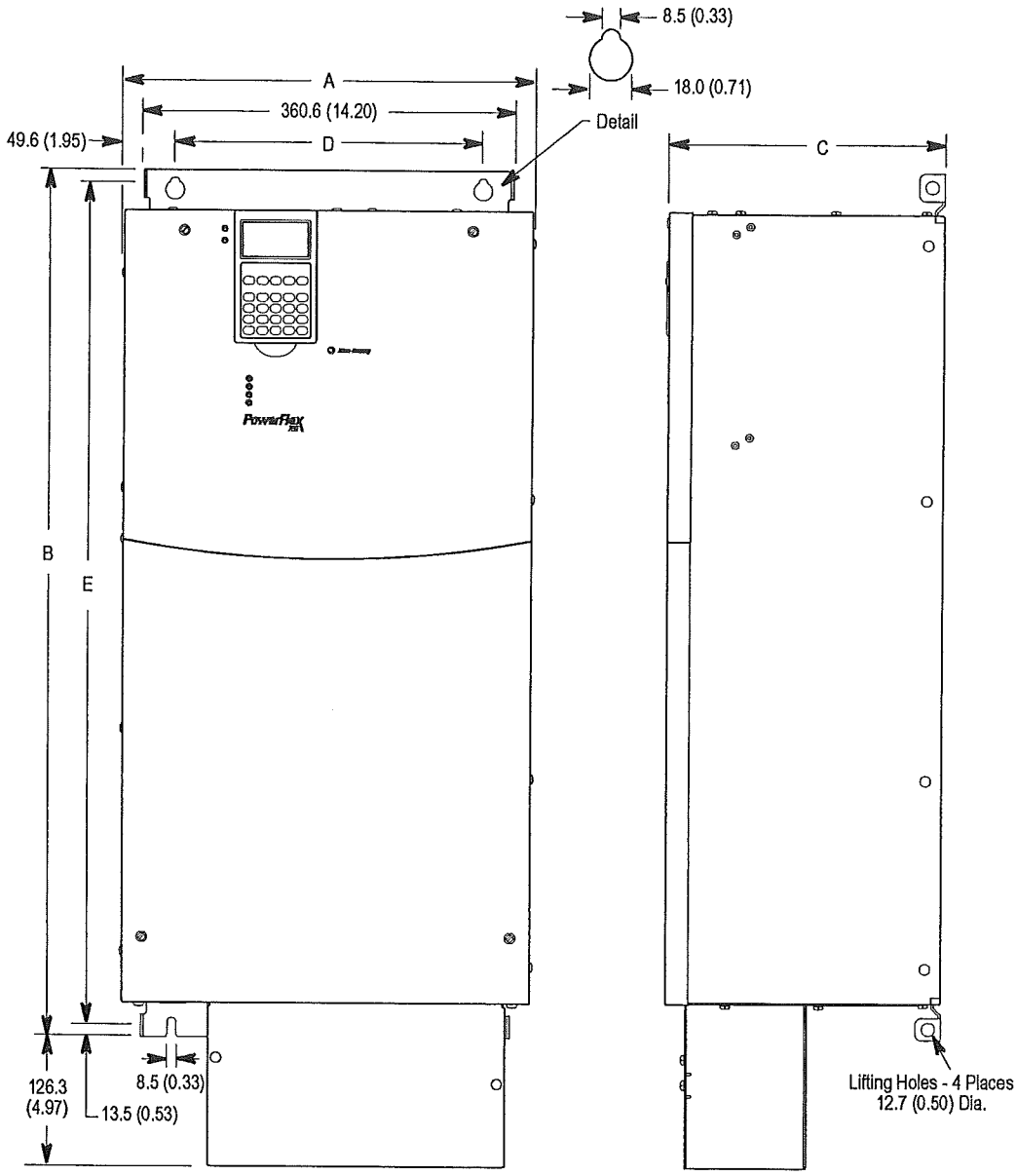

Dimensions are in millimeters and (inches)

Frame (1)	A *(Max.)*	B	C *(Max.)*	D	E	Approx. Weight (2) *kg (lbs.)*	
						Drive	Drive & Packaging
6	403.9 (15.90)	850.0 (33.46)	275.5 (10.85)	300.0 (11.81)	825.0 (32.48)	71.44 (157.5)	91.85 (202.5)

(1) Refer to Table A.E for frame information.

(2) Weights include HIM and Standard I/O.

Figure A.7 PowerFlex 700 Bottom View Dimensions

Frame	Rating	Dimensions
0	All	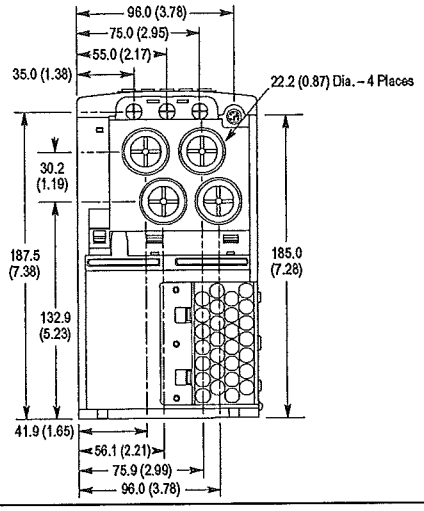
1	All	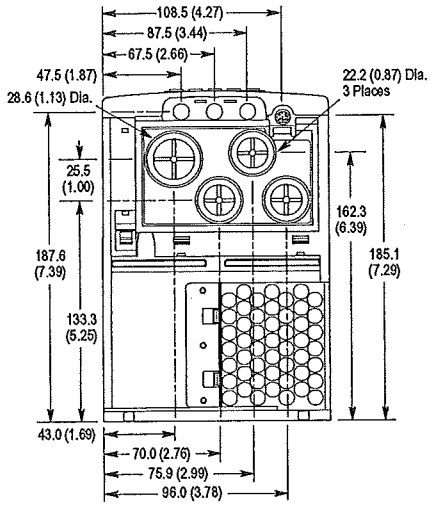
2	All	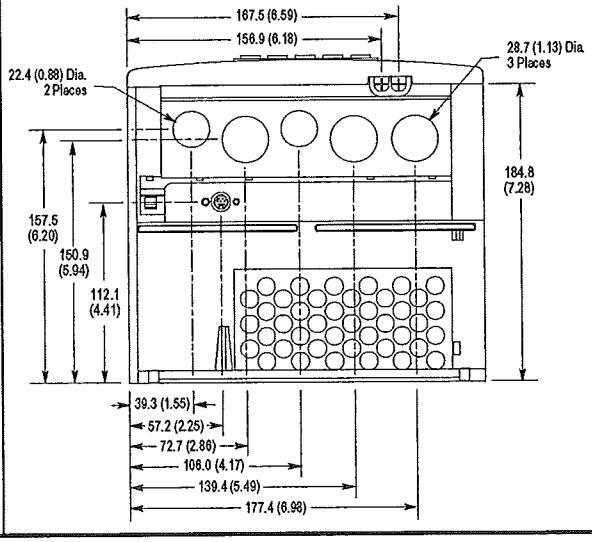

Frame	Rating	Dimensions
3	All *except* 50 HP, 480V (37 kW, 400V)	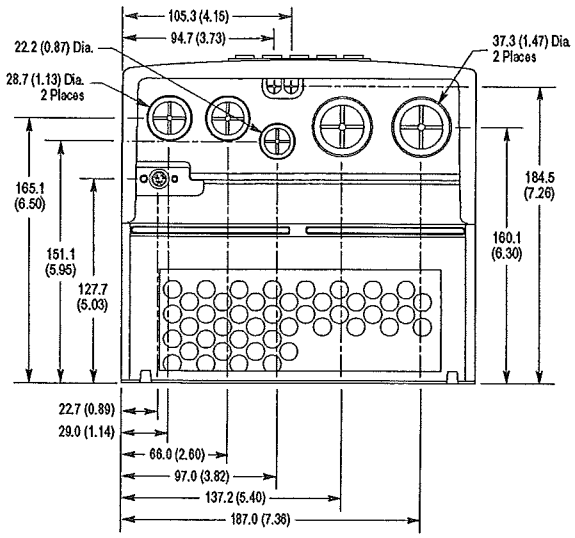
	50 HP, 480V (37 kW, 400V) Normal Duty Drive	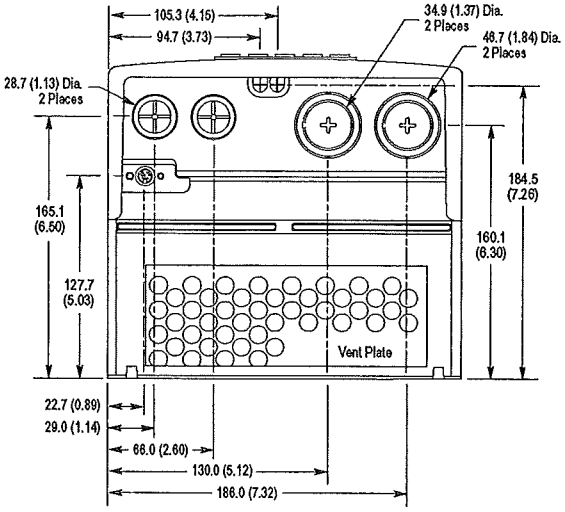
4	All	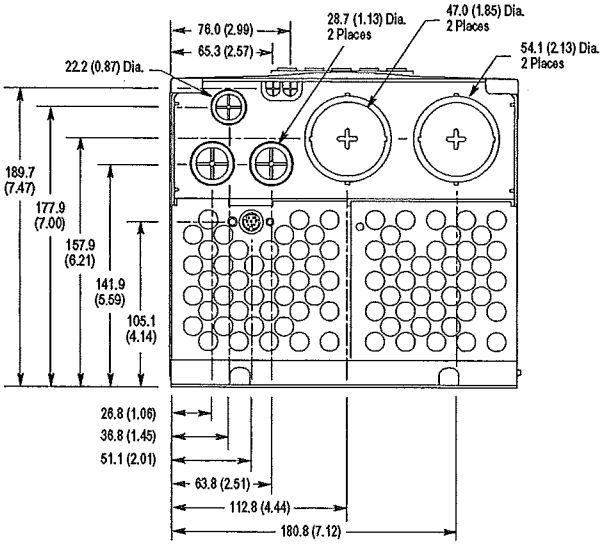

Frame	Rating	Dimensions
5	75 HP, 480V (55kW, 400V) Normal Duty Drive	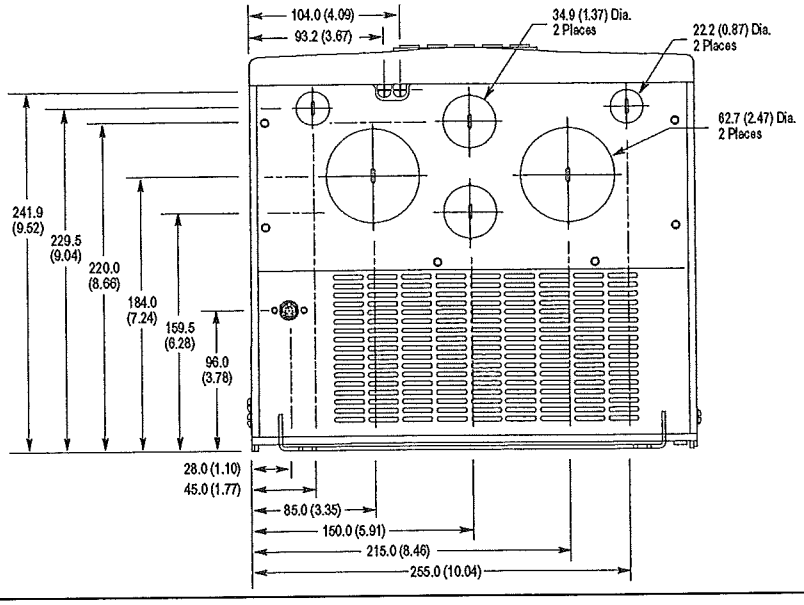
	100 HP, 480V Normal Duty Drive	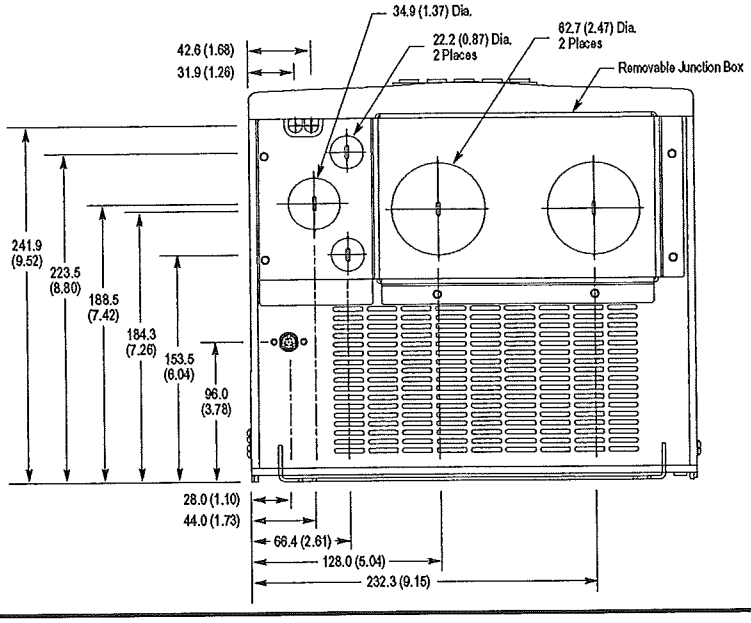

Frame	Rating	Dimensions
6	All	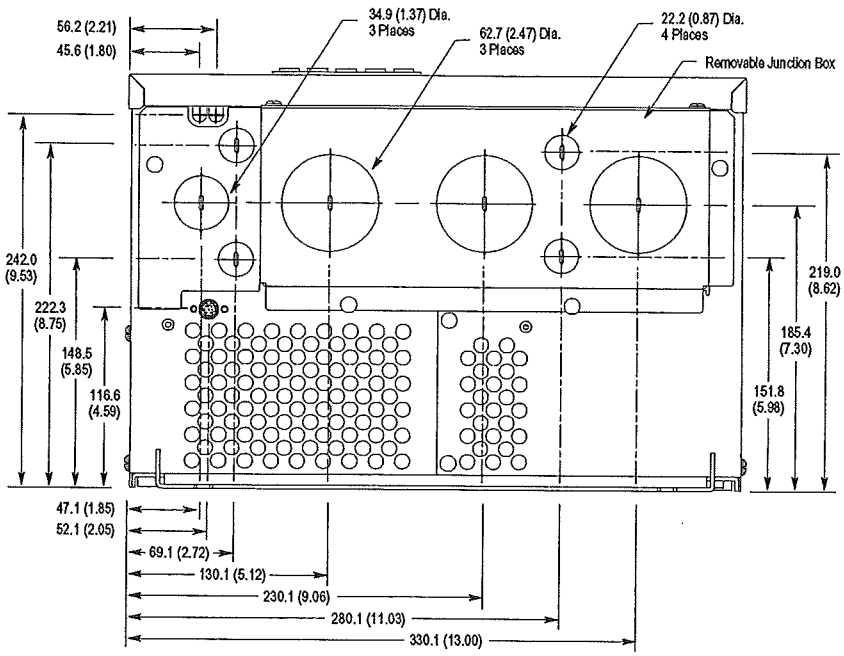

Frame Cross Reference

Table A.E PowerFlex 700 Frames

	208/240V AC Input		400V AC Input		480V AC Input		600V AC Input	
Frame	ND HP	HD HP	ND kW	HD kW	ND HP	HD HP	ND HP	HD HP
0	0.5	0.33	0.37	0.25	0.5	0.33	–	–
	1	0.75	0.75	0.55	1	0.75	–	–
	2	1.5	1.5	0.75	2	1.5	–	–
	3	2	2.2	1.5	3	2	–	–
	–	–	4	2.2	5	3	–	–
	–	–	5.5	4	7.5	5	–	–
1	5	3	7.5	5.5	10	7.5	10	7.5
	7.5	5	11	7.5	15	10	15	10
2	10	7.5	15	11	20	15	20	15
	–	–	18.5	15	25	20	25	20
3	15	10	22	18.5	30	25	30	25
	20	15	30	22	40	30	40	30
	–	–	37	30	50	40	50	40
4	–	–	45	37	60	50	–	–
5	40	30	55	45	75	60	–	–
	50	40	–	–	100	75	–	–
6	–	–	90	75	125	100	–	–
	–	–	110	90	150	125	–	–

HIM Overview

For information on . .	See page . .
External and Internal Connections	B-1
LCD Display Elements	B-2
ALT Functions	B-2
Menu Structure	B-3
Viewing and Editing Parameters	B-5
Removing/Installing the HIM	B-8

External and Internal Connections

The PowerFlex 700 provides a number of cable connection points (0 Frame shown).

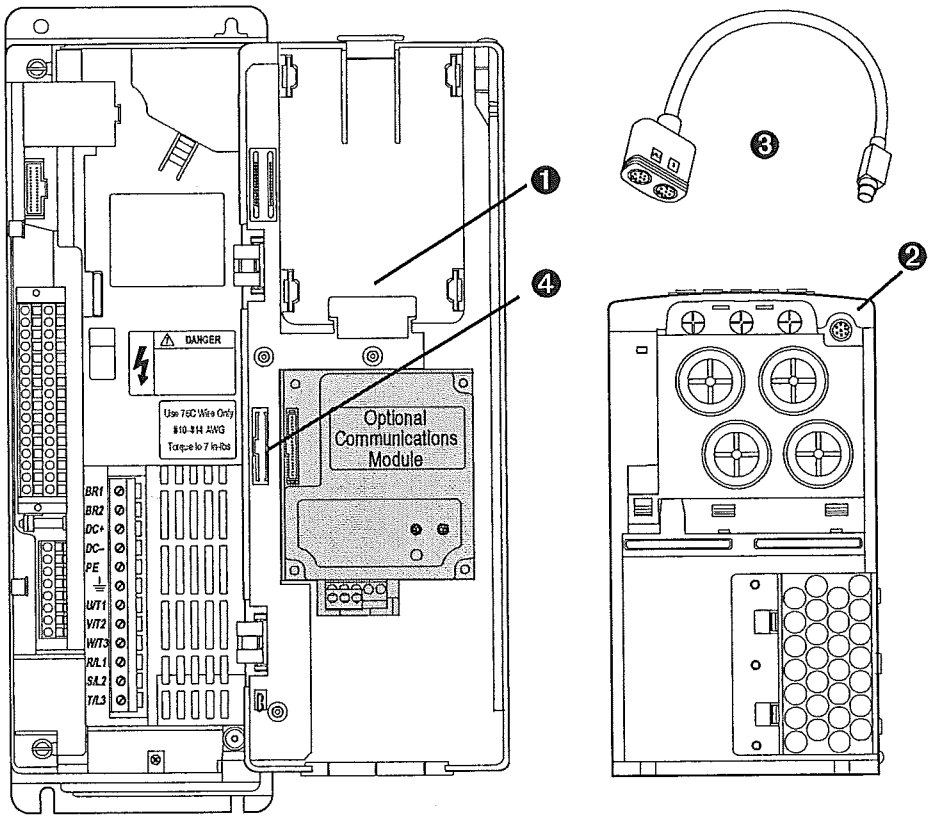

No.	Connector	Description
❶	DPI Port 1	HIM connection when installed in cover.
❷	DPI Port 2	Cable connection for handheld and remote options.
❸	DPI Port 3 or 2	Splitter cable connected to DPI Port 2 provides additional port.
❹	DPI Port 5	Cable connection for communications adapter.

LCD Display Elements

Display	Description
F-> Power Loss Auto	Direction | Drive Status | Alarm | Auto/Man | Information
0.0 Hz	Commanded or Output Frequency
Main Menu: Diagnostics Parameter Device Select	Programming / Monitoring / Troubleshooting

ALT Functions

To use an ALT function, press the ALT key, release it, then press the programming key associated with one of the following functions:

Table B.A ALT Key Functions

ALT Key and then ...			Performs this function ...
ALT	Esc	S.M.A.R.T.	Displays the S.M.A.R.T. screen.
ALT	Sel	View	Allows the selection of how parameters will be viewed or detailed information about a parameter or component.
ALT	▲	Lang	Displays the language selection screen.
ALT	▼	Auto / Man	Switches between Auto and Manual Modes.
ALT	↵	Remove	Allows HIM removal without causing a fault if the HIM is not the last controlling device and does not have Manual control of the drive.
ALT	.	Exp	Allows value to be entered as an exponent. (Not available on PowerFlex 700.)
ALT	+/–	Param #	Allows entry of a parameter number for viewing/ editing.

Menu Structure

Figure B.1 HIM Menu Structure

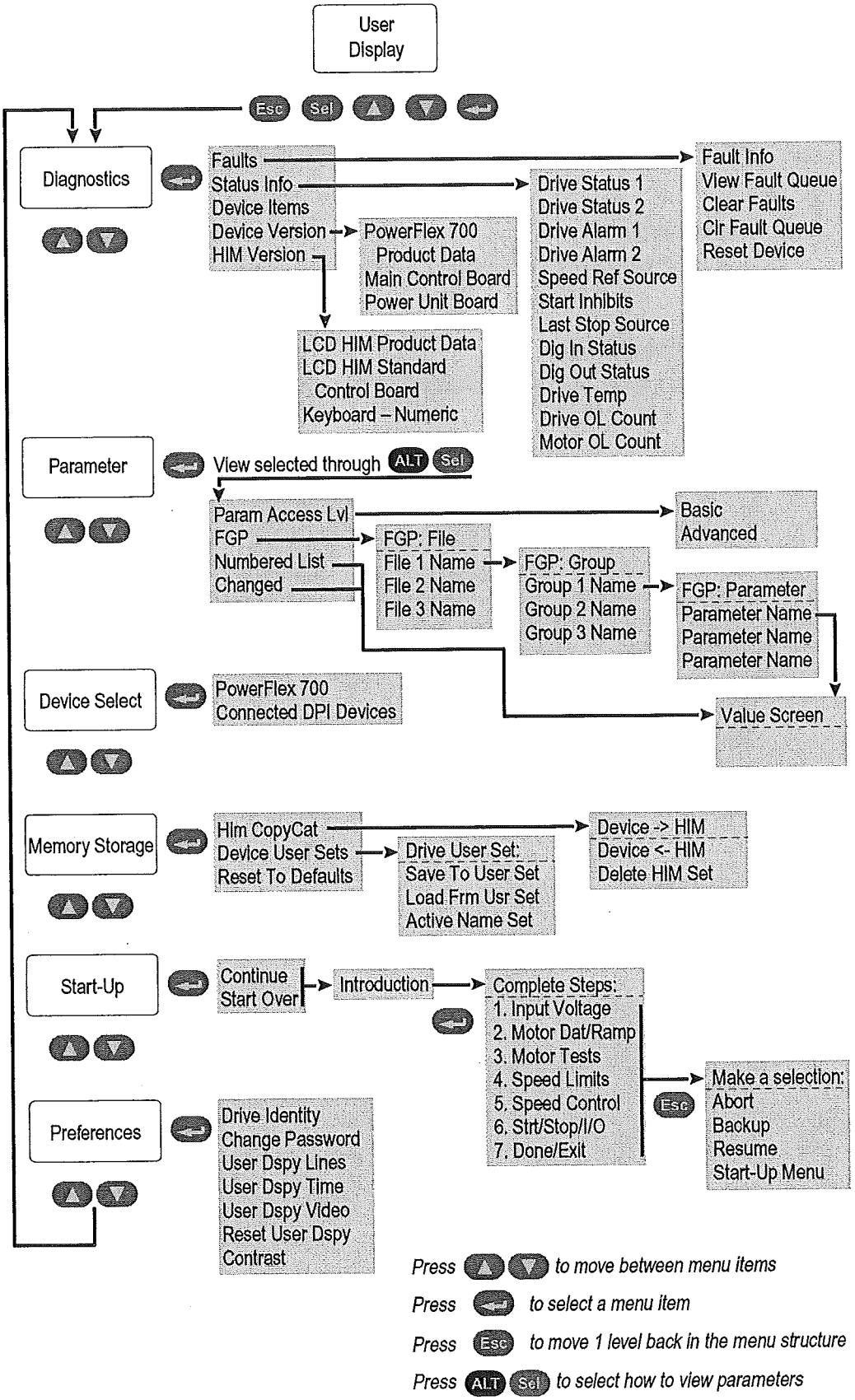

Diagnostics Menu

When a fault trips the drive, use this menu to access detailed data about the drive.

Option	Description
Faults	View fault queue or fault information, clear faults or reset drive.
Status Info	View parameters that display status information about the drive.
Device Version	View the firmware version and hardware series of components.
HIM Version	View the firmware version and hardware series of the HIM.

Parameter Menu

Refer to Viewing and Editing Parameters on page B-5.

Device Select Menu

Use this menu to access parameters in connected peripheral devices.

Memory Storage Menu

Drive data can be saved to, or recalled from, User and HIM sets.
User sets are files stored in permanent nonvolatile drive memory.
HIM sets are files stored in permanent nonvolatile HIM memory.

Option	Description
HIM Copycat Device -> HIM Device <- HIM	Save data to a HIM set, load data from a HIM set to active drive memory or delete a HIM set.
Device User Sets	Save data to a User set, load data from a User set to active drive memory or name a User set.
Reset To Defaults	Restore the drive to its factory-default settings.

Start Up Menu

See Chapter 2.

Preferences Menu

The HIM and drive have features that you can customize.

Option	Description
Drive Identity	Add text to identify the drive.
Change Password	Enable/disable or modify the password.
User Dspy Lines	Select the display, parameter, scale and text for the User Display. The User Display is two lines of user-defined data that appears when the HIM is not being used for programming.
User Dspy Time	Set the wait time for the User Display or enable/disable it.
User Dspy Video	Select Reverse or Normal video for the Frequency and User Display lines.
Reset User Dspy	Return all the options for the User Display to factory default values.

The PowerFlex 700 drive is initially set to Basic Parameter View. To view all parameters, set parameter 196 [Param Access Lvl] to option 1 "Advanced". Parameter 196 is not affected by the Reset to Defaults function.

Viewing and Editing Parameters

LCD HIM

Step	Key(s)	Example Displays
1. In the Main Menu, press the Up Arrow or Down Arrow to scroll to "Parameter."	▲ or ▼	
2. Press Enter. "FGP File" appears on the top line and the first three files appear below it.	↵	FGP: File Monitor Motor Control Speed Reference
3. Press the Up Arrow or Down Arrow to scroll through the files.	▲ or ▼	
4. Press Enter to select a file. The groups in the file are displayed under it.	↵	FGP: Group Motor Data Torq Attributes Volts per Hertz
5. Repeat steps 3 and 4 to select a group and then a parameter. The parameter value screen will appear.		FGP: Parameter Maximum Voltage Maximum Freq Compensation
6. Press Enter to edit the parameter.	↵	
7. Press the Up Arrow or Down Arrow to change the value. If desired, press Sel to move from digit to digit, letter to letter, or bit to bit. The digit or bit that you can change will be highlighted.	▲ or ▼ Sel	FGP: Par 55 Maximum Freq 60.00 Hz 25 <> 400.00
8. Press Enter to save the value. If you want to cancel a change, press Esc.	↵	
9. Press the Up Arrow or Down Arrow to scroll through the parameters in the group, or press Esc to return to the group list.	▲ or ▼ Esc	FGP: Par 55 Maximum Freq 90.00 Hz 25 <> 400.00

Numeric Keypad Shortcut

If using a HIM with a numeric keypad, press the ALT key and the +/– key to access the parameter by typing its number.

Linking Parameters (Vector Control Option Only)

Most parameter values are entered directly by the user. However, certain parameters can be "linked," so the value of one parameter becomes the value of another. For Example: the value of an analog input can be linked to [Accel Time 2]. Rather than entering an acceleration time directly (via HIM), the link allows the value to change by varying the analog signal. This can provide additional flexibility for advanced applications.

Each link has 2 components:

- Source parameter – sender of information.
- Destination parameter – receiver of information.

Most parameters can be a source of data for a link, except parameter values that contain an integer representing an ENUM (text choice). These are not allowed, since the integer is not actual data (it represents a value). Table B.B lists the parameters that can be destinations. All links must be established between equal data types (parameter value formatted in floating point can only source data to a destination parameter value that is also floating point).

Establishing A Link

Step	Key(s)	Example Displays
1. Select a valid destination parameter (see Table B.B) to be linked (refer to page B-5). The parameter value screen will appear.		FGP: Parameter Accel Time 1 Accel Time 2 Decel Time 1
2. Press Enter to edit the parameter. The cursor will move to the value line.	Enter	
3. Press ALT and then View (Sel). Next, press the Up or Down Arrow to change "Present Value" to "Define Link." Press Enter.	ALT + Sel ▲ or ▼ Enter	Min: 0.1 Secs Max: 3600.0 Secs Dflt: 10.0 Secs Present Value ⋮ Define Link
4. Enter the Source Parameter Number and press Enter. The linked parameter can now be viewed two different ways by repeating steps 1-4 and selecting "Present Value" or "Define Link." If an attempt is made to edit the value of a linked parameter, "Parameter is Linked!" will be displayed, indicating that the value is coming from a source parameter and can not be edited.	Enter Enter	Parameter: #141 Accel Time 2 Link: 017 Analog In1 Value
5. To remove a link, repeat steps 1-5 and change the source parameter number to zero (0).		
6. Press Esc to return to the group list.	Esc	

Table B.B Linkable Parameters

Number	Parameter
54	Maximum Voltage
56	Compensation
57	Flux Up Mode
58	Flux Up Time
59	SV Boost Filter
62	IR Voltage Drop
63	Flux Current Ref
69	Start/Acc Boost
70	Run Boost
71	Break Voltage
72	Break Frequency
84	Skip Frequency 1
85	Skip Frequency 2
86	Skip Frequency 3
87	Skip Freq Band
91	Speed Ref A Hi
92	Speed Ref A Lo
94	Speed Ref B Hi
95	Speed Ref B Lo
97	TB Man Ref Hi
98	TB Man Ref Lo
100	Jog Speed
101	Preset Speed 1
102	Preset Speed 2
103	Preset Speed 3
104	Preset Speed 4
105	Preset Speed 5
106	Preset Speed 6
107	Preset Speed 7
119	Trim Hi
120	Trim Lo
121	Slip RPM @ FLA
122	Slip Comp Gain
123	Slip RPM Meter
127	PI Setpoint
129	PI Integral Time
130	PI Prop Gain
131	PI Lower Limit
132	PI Upper Limit
133	PI Preload
140	Accel Time 1
141	Accel Time 2
142	Decel Time 1
143	Decel Time 2
146	S-Curve %
148	Current Lmt Val
149	Current Lmt Gain
151	PWM Frequency
152	Droop RPM @ FLA
153	Regen Power Limit
154	Current Rate Limit
158	DC Brake Level
159	DC Brake Time
160	Bus Reg Ki

Number	Parameter
164	Bus Reg Kp
165	Bus Reg Kd
170	Flying StartGain
175	Auto Rstrt Delay
180	Wake Level
181	Wake Time
182	Sleep Level
183	Sleep Time
185	Power Loss Time
186	Power Loss Level
321	Anlg In Sqr Root
322	Analog In1 Hi
323	Analog In1 Lo
324	Analog In1 Loss
325	Analog In2 Hi
326	Analog In2 Lo
327	Analog In2 Loss
343	Analog Out1 Hi
344	Analog Out1 Lo
346	Analog Out2 Hi
347	Analog Out2 Lo
381	Dig Out1 Level
382	Dig Out1 OnTime
383	Dig Out1 OffTime
385	Dig Out2 Level
386	Dig Out2 OnTime
387	Dig Out2 OffTime
389	Dig Out3 Level
390	Dig Out3 OnTime
391	Dig Out3 OffTime
416	Fdbk Filter Sel
419	Notch Filter Freq
420	Notch Filter K
428	Torque Ref A Hi
429	Torque Ref A Lo
430	Torq Ref A Div
432	Torque Ref B Hi
433	Torque Ref B Lo
434	Torq Ref B Mult
435	Torque Setpoint
436	PI Torque Trim
437	Pos Torque Limit
438	Neg Torque Limit
445	Ki Speed Loop
446	Kp Speed Loop
447	Kf Speed Loop
449	Speed Desired BW
450	Total Inertia
454	Rev Speed Limit
460	PI Reference Hi
461	PI Reference Lo
462	PI Feedback Hi
463	PI Feedback Lo

Removing/Installing the HIM

The HIM can be removed or installed while the drive is powered.

Important: HIM removal is only permissible in Auto mode. If the HIM is removed while in Manual mode or the HIM is the only remaining control device, a fault will occur.

Step	Key(s)	Example Displays
To remove the HIM . . . 1. Press ALT and then Enter (Remove). The Remove HIM confirmation screen appears. 2. Press Enter to confirm that you want to remove the HIM. 3. Remove the HIM from the drive. To install HIM . . . 1. Insert into drive or connect cable.	ALT + ↵	Remove Op Intrfc: Press Enter to Disconnect Op Intrfc? (Port 1 Control)

Application Notes

For information on . .	See page . .
External Brake Resistor	C-1
Minimum Speed	C-1
Motor Control Technology	C-2
Motor Overload	C-4
Overspeed	C-5
Power Loss Ride Through	C-6

For information on . .	See page . .
Process PI for Standard Control	C-7
Reverse Speed Limit	C-10
Skip Frequency	C-11
Sleep Wake Mode	C-13
Start At PowerUp	C-14
Stop Mode	C-15

External Brake Resistor

Figure C.1 External Brake Resistor Circuitry

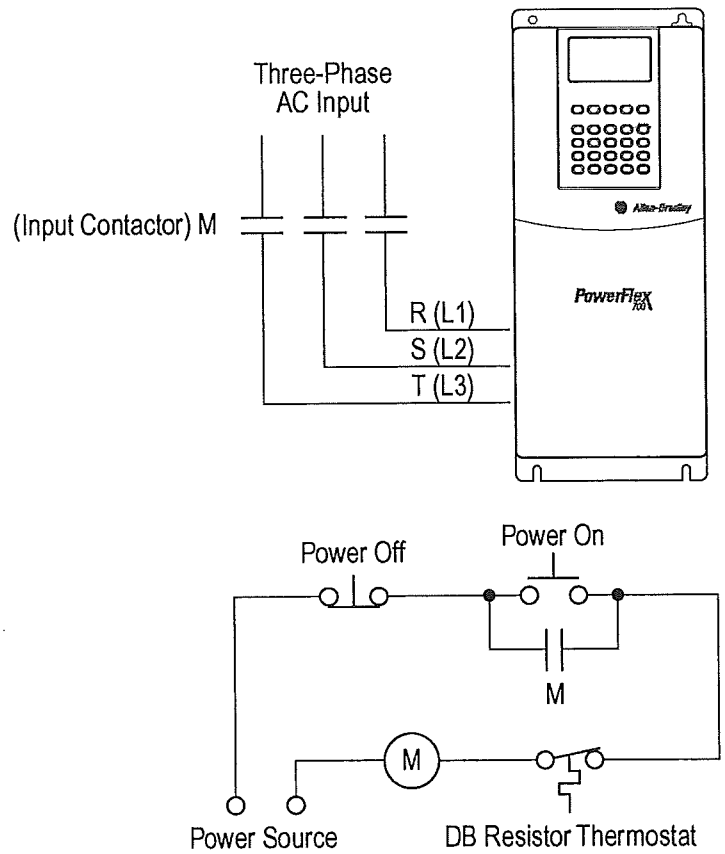

Minimum Speed

Refer to Reverse Speed Limit on page C-10

Motor Control Technology

Within the PowerFlex family there are several motor control technologies:

- Torque Producers
- Torque Controllers
- Speed Regulators

Torque Producers

Volts/Hertz

This technology follows a specific pattern of voltage and frequency output to the motor, regardless of the motor being used. The shape of the V/Hz curve can be controlled a limited amount, but once the shape is determined, the drive output is fixed to those values. Given the fixed values, each motor will react based on its own speed/torque characteristics.

This technology is good for basic centrifugal fan/pump operation and for most multi-motor applications. Torque production is generally good.

Sensorless Vector

This technology combines the basic Volts/Hertz concept with known motor parameters such as Rated FLA, HP, Voltage, stator resistance and flux producing current. Knowledge of the individual motor attached to the drive allows the drive to adjust the output pattern to the motor and load conditions. By identifying motor parameters, the drive can maximize the torque produced in the motor and extend the speed range at which that torque can be produced.

This technology is excellent for applications that require a wider speed range and applications that need maximum possible torque for breakaway, acceleration or overload. Centrifuges, extruders, conveyors and others are candidates.

Torque Controllers

Vector

This technology differs from the two above, because it actually controls or regulates torque. Rather than allowing the motor and load to actually determine the amount of torque produced, Vector technology allows the drive to regulate the torque to a defined value. By independently identifying and controlling both flux and torque currents in the motor, true control of torque is achieved. High bandwidth current regulators remain active with or without encoder feedback to produce outstanding results.

This technology is excellent for those applications where torque control, rather than mere torque production, is key to the success of the process. These include web handling, demanding extruders and lifting applications such as hoists or material handling.

Vector Control can operate in one of two configurations:

1. Encoderless

   Not to be confused with Sensorless Vector above, Encoderless Vector based on Allen-Bradley's patented Field Oriented Control technology means that a feedback device is not required. Torque control can be achieved across a significant speed range without feedback.

2. Closed Loop (with Encoder)

   Vector Control with encoder feedback utilizes Allen-Bradley's Force Technology™. This industry leading technology allows the drive to control torque over the entire speed range, including zero speed. For those applications that require smooth torque regulation at very low speeds or full torque at zero speed, Closed Loop Vector Control is the answer.

Speed Regulators

Any of the PowerFlex drives, regardless of their motor control technology (Volts/Hz, Sensorless Vector or Vector) can be set up to regulate speed. Speed regulation and torque regulation must be separated to understand drive operation.

The Power Flex 70 and PowerFlex 700 with Standard Control can be programmed to regulate speed using the slip compensation feature. Slip compensation reacts to load changes by adjusting the drive output frequency to maintain motor speed. Torque production operates independently. This feature produces speed regulation of about 0.5% of base speed over a specified speed range (40:1 for V/Hz and 80:1 for Sensorless Vector). These two drives do not have the capability to extend the speed range or tighten the speed regulation below 0.5% because they do not have connections for a feedback device.

The PowerFlex 700 with the Vector Control option can offer better speed regulation by adding speed feedback. Using a speed feedback device (encoder) tightens speed regulation to 0.001% of base speed and extends the speed range to zero speed.

Motor Overload

For single motor applications the drive can be programmed to protect the motor from overload conditions. An electronic thermal overload I^2T function emulates a thermal overload relay. This operation is based on three parameters; [Motor NP FLA], [Motor OL Factor] and [Motor OL Hertz] (parameters 042, 048 and 047, respectively).

[Motor NP FLA] is multiplied by [Motor OL Factor] to allow the user to define the continuous level of current allowed by the motor thermal overload. [Motor OL Hertz] is used to allow the user to adjust the frequency below which the motor overload is derated.

The motor can operate up to 102% of FLA continuously. If the drive had just been activated, it will run at 150% of FLA for 180 seconds. If the motor had been operating at 100% for over 30 minutes, the drive will run at 150% of FLA for 60 seconds. These values assume the drive is operating above [Motor OL Hertz], and that [Motor OL Factor] is set to 1.00.

Operation below 100% current causes the temperature calculation to account for motor cooling.

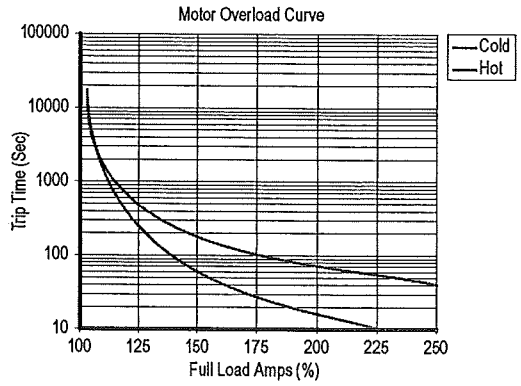

[Motor OL Hertz] defines the frequency where motor overload capacity derate should begin. The motor overload capacity is reduced when operating below [Motor OL Hertz]. For all settings of [Motor OL Hertz] other than zero, the overload capacity is reduced to 70% at an output frequency of zero.

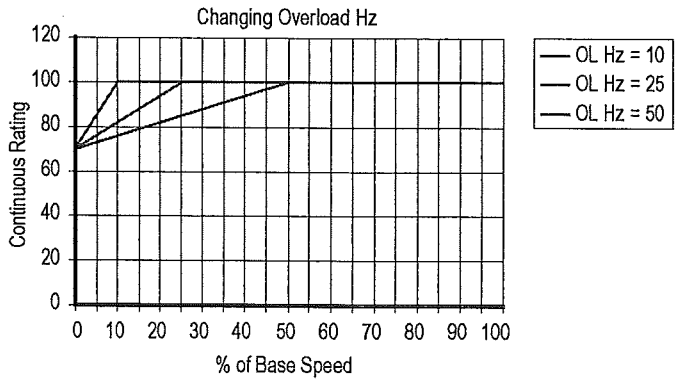

[Motor NP FLA] is multiplied by [Motor OL Factor] to select the rated current for the motor thermal overload. This can be used to raise or lower the level of current that will cause the motor thermal overload to trip. The effective overload factor is a combination of [Motor OL Hertz] and [Motor OL Factor].

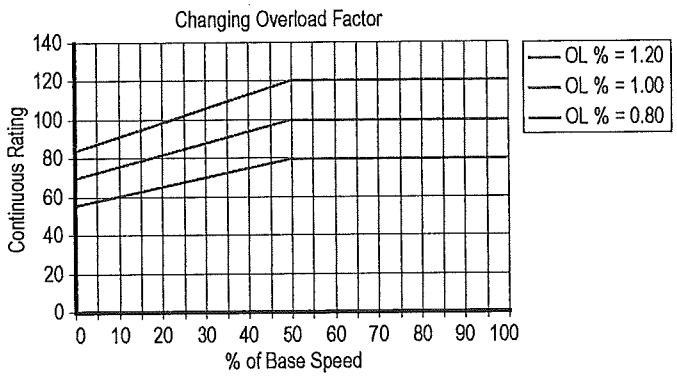

Overspeed

Overspeed Limit is a user programmable value that allows operation at maximum speed, but also provides an "overspeed band" that will allow a speed regulator such as encoder feedback or slip compensation to increase the output frequency above maximum speed in order to maintain maximum motor speed.

The figure below illustrates a typical Custom V/Hz profile. Minimum Speed is entered in Hertz and determines the lower speed reference limit during normal operation. Maximum Speed is entered in Hertz and determines the upper speed reference limit. The two "Speed" parameters only limit the speed reference and not the output frequency.

The actual output frequency at maximum speed reference is the sum of the speed reference plus "speed adder" components from functions such as slip compensation.

The Overspeed Limit is entered in Hertz and added to Maximum Speed and the sum of the two (Speed Limit) limit the output frequency. This sum (Speed Limit) must is compared to Maximum Frequency and an alarm is initiated which prevents operation if the Speed Limit exceeds Maximum Frequency.

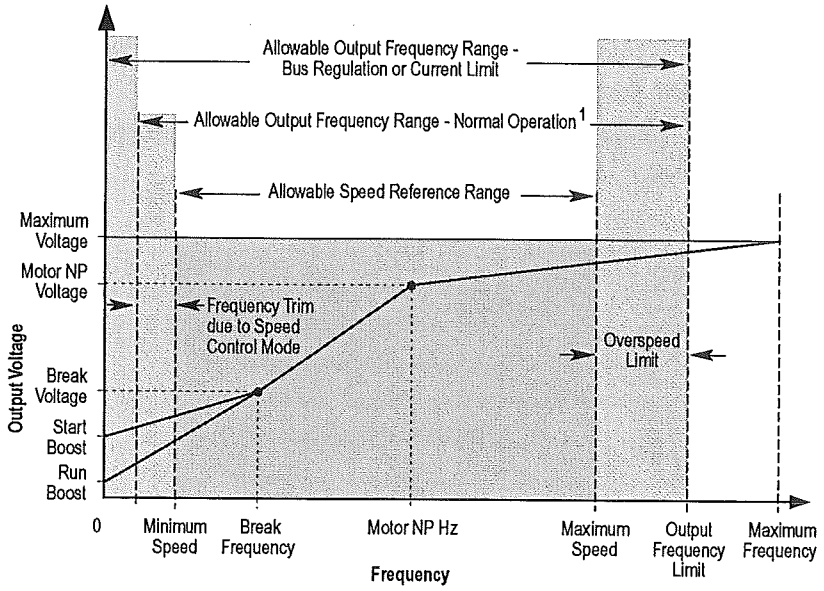

Note 1: The lower limit on this range can be 0 depending on the value of Speed Adder

Power Loss Ride Through

When AC input power is lost, energy is being supplied to the motor from the DC bus capacitors. The energy from the capacitors is not being replaced (via the AC line), thus, the DC bus voltage will fall rapidly. The drive must detect this fall and react according to the way it is programmed. Two parameters display DC bus voltage:

- [DC Bus Voltage] - displays the instantaneous value
- [DC Bus Memory] - displays a 6 minute running average of the voltage.

All drive reactions to power loss are based on [DC Bus Memory]. This averages low and high line conditions and sets the drive to react to the average rather than assumed values. For example, a 480V installation would have a 480V AC line and produce a nominal 648V DC bus. If the drive were to react to a fixed voltage for line loss detect, (i.e. 533V DC), then normal operation would occur for nominal line installations. However, if a lower nominal line voltage of 440V AC was used, then nominal DC bus voltage would be only 594V DC. If the drive were to react to the fixed 533V level (only –10%) for line loss detect, any anomaly might trigger a false line loss detection. Line loss, therefore always uses the 6 minute average for DC bus voltage and detects line loss based on a fixed percentage of that memory. In the same example, the average would be 594V DC instead of 650V DC and the fixed percentage, 27% for "Coast to Stop" and 18% for all others, would allow identical operation regardless of line voltage.

The PowerFlex 70 uses only these fixed percentages. The PowerFlex 700 can selectively use the same percentages or the user can set a trigger point for line loss detect. The adjustable trigger level is set using [Power Loss Level] (see [Power Loss Level] on page 3-33).

Figure C.2 Power Loss Mode = Coast

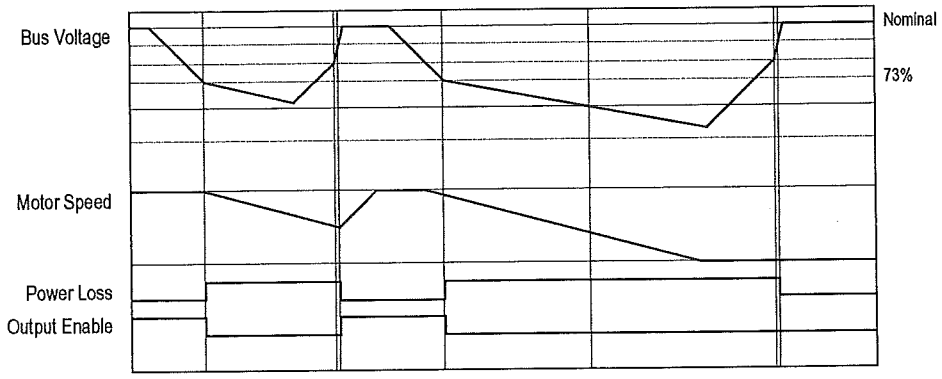

Figure C.3 Power Loss Mode = Decel

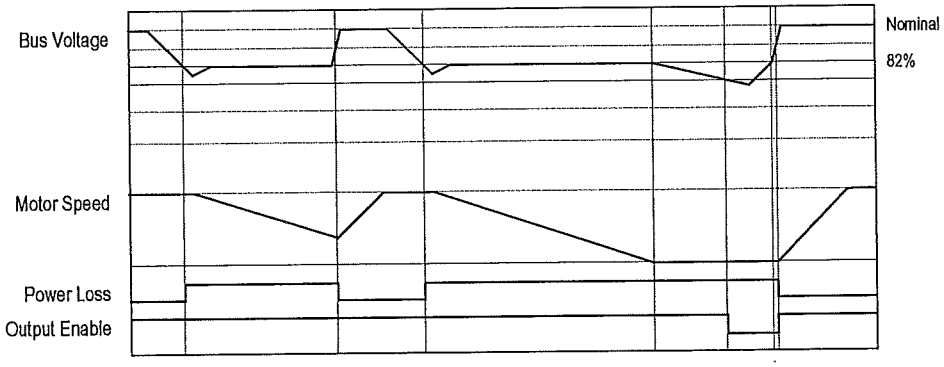

Process PI for Standard Control

The internal PI function of the PowerFlex 700 provides closed loop process control with proportional and integral control action. The function is designed for use in applications that require simple control of a process without external control devices. The PI function allows the microprocessor of the drive to follow a single process control loop.

The PI function reads a process variable input to the drive and compares it to a desired setpoint stored in the drive. The algorithm will then adjust the output of the PI regulator, changing drive output frequency to try and make the process variable equal the setpoint.

It can operate as trim mode by summing the PI loop output with a master speed reference.

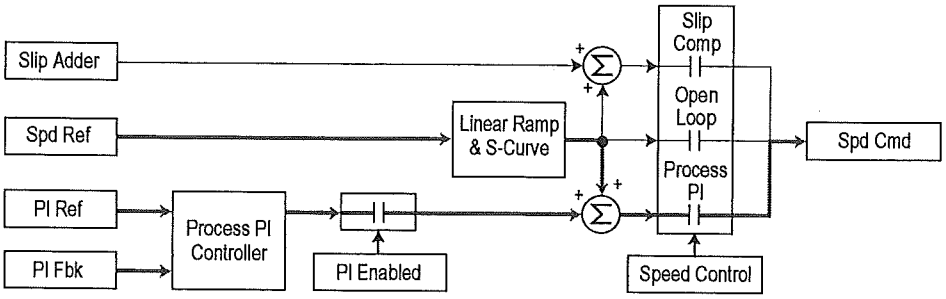

Or, it can operate as control mode by supplying the entire speed reference. This method is identified as "exclusive mode"

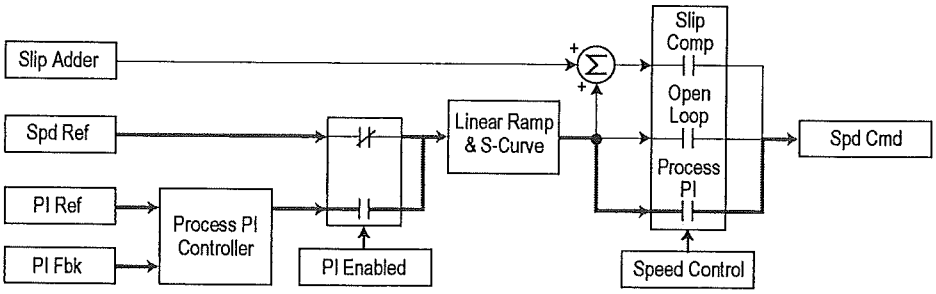

PI Enable

The output of the PI loop can be turned on (enabled) or turned off (disabled). This control allows the user to determine when the PI loop is providing part or all of the commanded speed. The logic for enabling the PI loop is shown below.

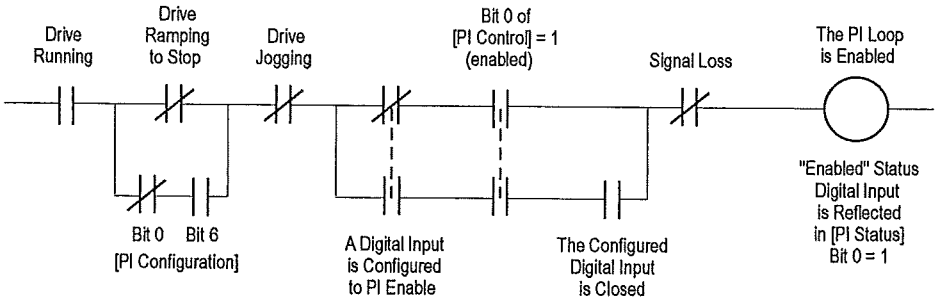

The drive must be running for the PI loop to be enabled. The loop will be disabled when the drive is ramping to a stop (unless "Stop Mode" is configured in [PI Configuration]), jogging or the signal loss protection for the analog input(s) is sensing a loss of signal.

If a digital input has been configured to "PI Enable," two events are required to enable the loop: the digital input must be closed AND bit 0 of the PI Control parameter must be = 1.

If no digital input is configured to "PI Enable," then only the Bit 0 = 1 condition must be met. If the bit is permanently set to a "1", then the loop will become enabled as soon as the drive goes into "run".

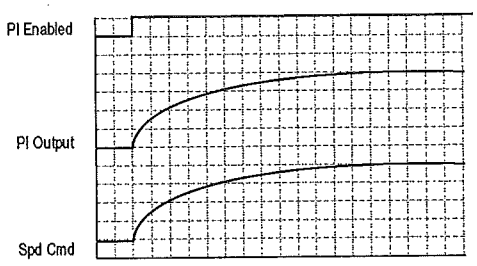

PI Pre-load Value = 0

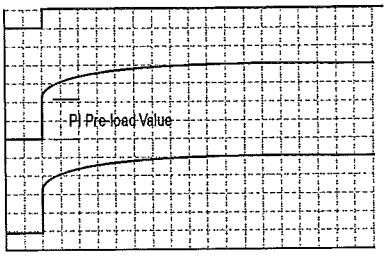

PI Pre-load Value > 0

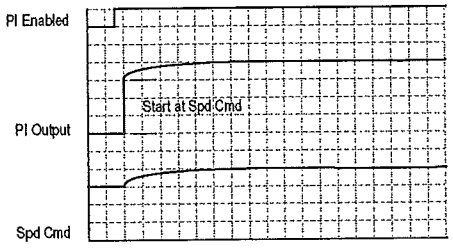

Pre-load to Command Speed

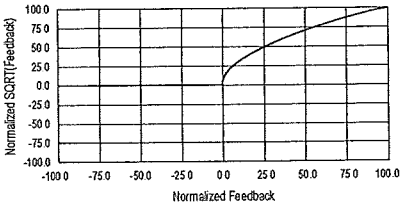

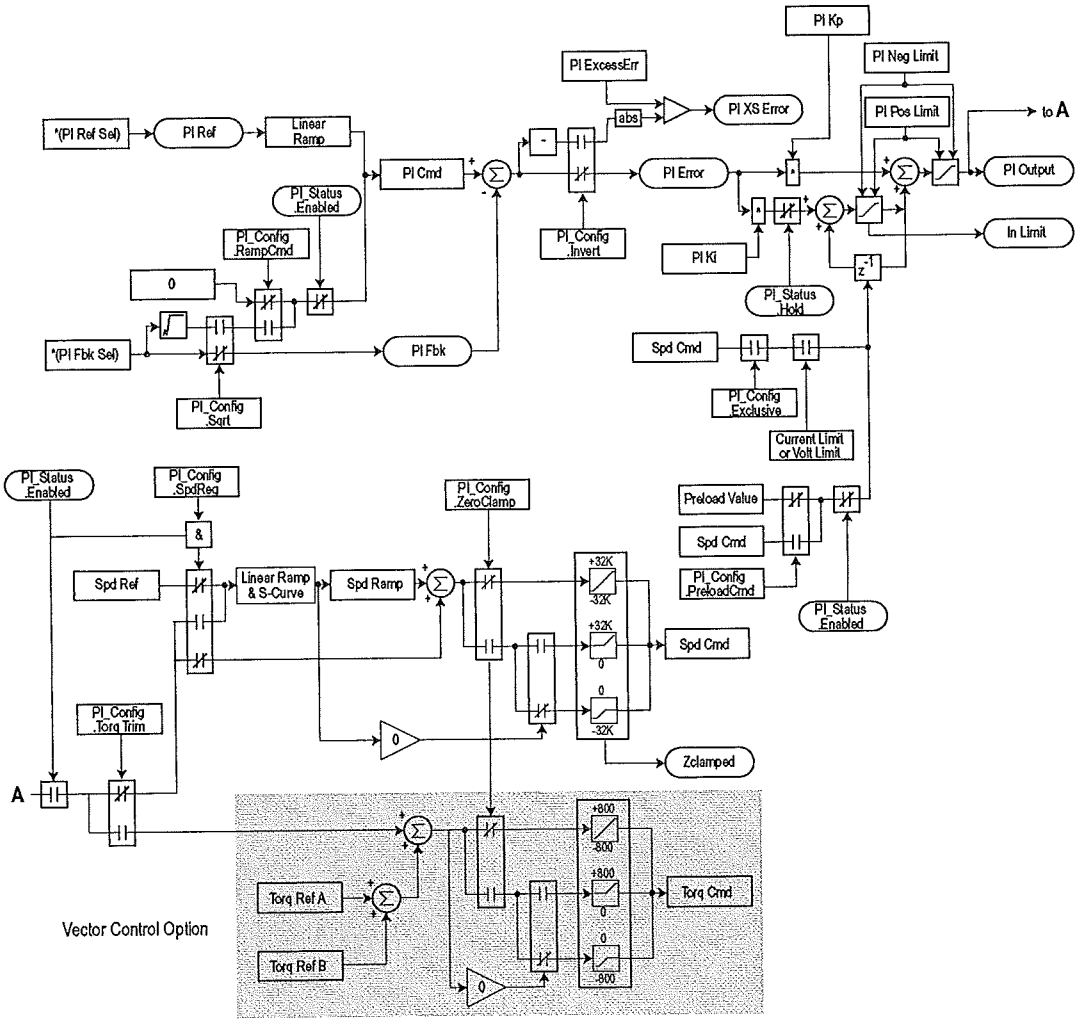

Reverse Speed Limit

Figure C.4 [Rev Speed Limit], parameter 454 set to zero

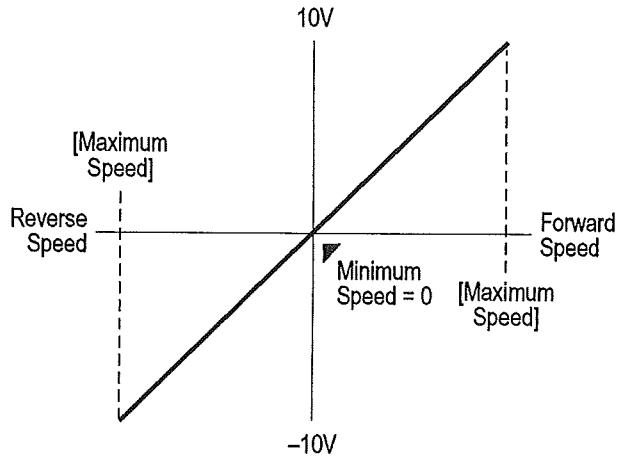

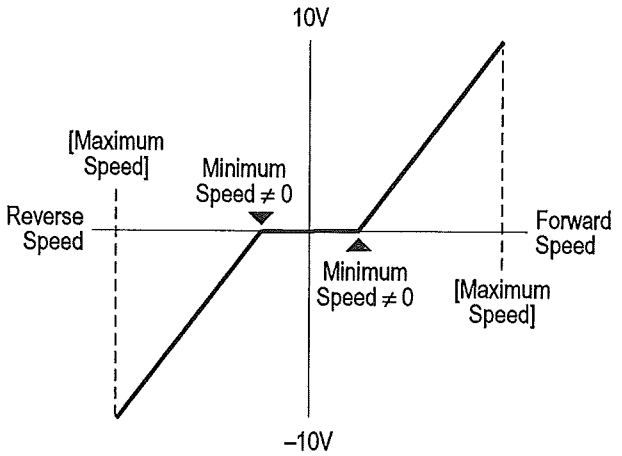

Figure C.5 [Rev Speed Limit], parameter 454 set to a non-zero Value

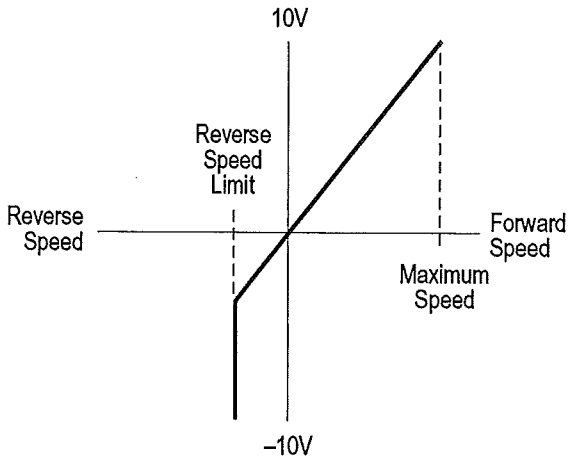

Skip Frequency

Figure C.6 Skip Frequency

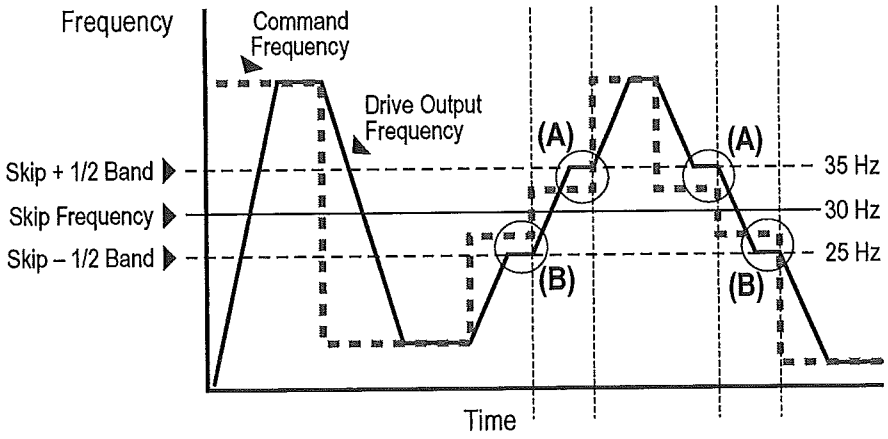

Some machinery may have a resonant operating frequency that must be avoided to minimize the risk of equipment damage. To assure that the motor cannot continuously operate at one or more of the points, skip frequencies are used. Parameters 084-086, ([Skip Frequency 1-3]) are available to set the frequencies to be avoided.

The value programmed into the skip frequency parameters sets the center point for an entire "skip band" of frequencies. The width of the band (range of frequency around the center point) is determined by parameter 87, [Skip Freq Band]. The range is split, half above and half below the skip frequency parameter.

If the commanded frequency of the drive is greater than or equal to the skip (center) frequency and less than or equal to the high value of the band (skip plus 1/2 band), the drive will set the output frequency to the high value of the band. See (A) in Figure C.6.

If the commanded frequency is less than the skip (center) frequency and greater than or equal to the low value of the band (skip minus 1/2 band), the drive will set the output frequency to the low value of the band. See (B) in Figure C.6.

Acceleration and deceleration are not affected by the skip frequencies. Normal accel/decel will proceed through the band once the commanded frequency is greater than the skip frequency. See (A) & (B) in Figure C.6. This function affects only continuous operation within the band.

Skip Frequency Examples

The skip frequency will have hysteresis so the output does not toggle between high and low values. Three distinct bands can be programmed. If none of the skip bands touch or overlap, each band has its own high/low limit.

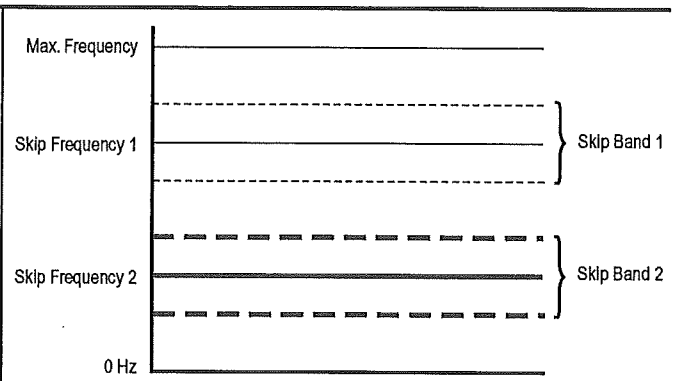

If skip bands overlap or touch, the center frequency is recalculated based on the highest and lowest band values.

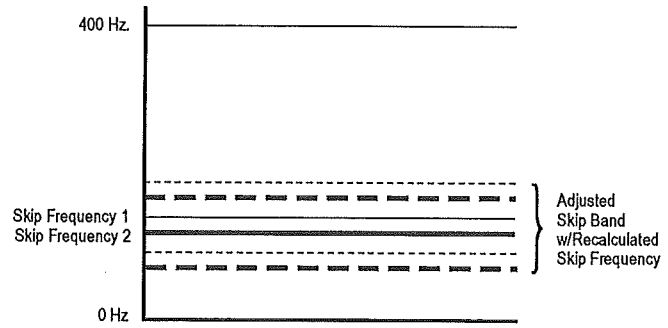

If a skip band(s) extend beyond the max frequency limits, the highest band value will be clamped at the max frequency limit. The center frequency is recalculated based on the highest and lowest band values.

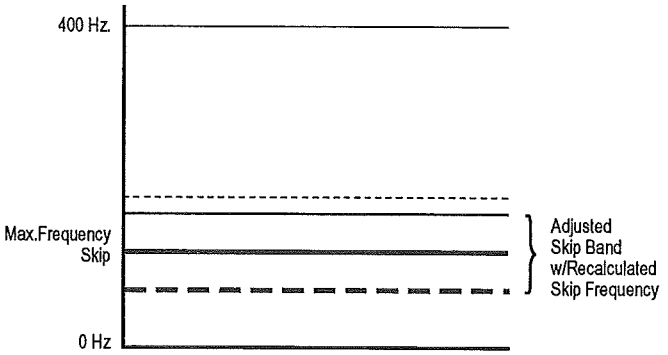

If the band is outside the limits, the skip band is inactive.

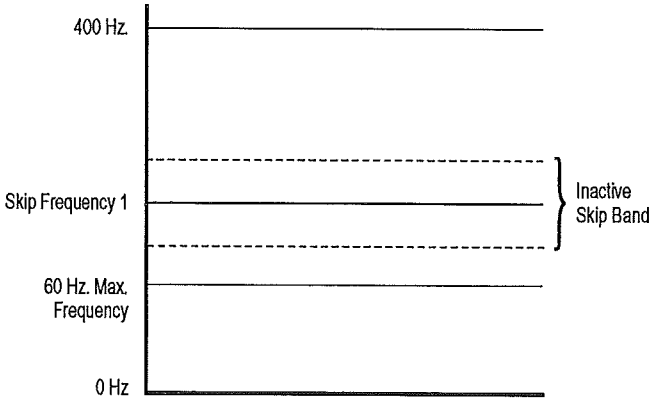

Sleep Wake Mode

This function stops (sleep) and starts (wake) the drive based on separately configurable analog input levels rather than discrete start and stop signals. The drive will start (wake) when an analog signal is greater than or equal to the user specified [Wake Level], and stop the drive when an analog signal is less than or equal to the user specified [Sleep Level].

Definitions

- Wake - A start command generated when the analog input value remains above [Wake Level] for a time greater than [Wake Time].
- Sleep - A Stop command generated when the analog input value remains below [Sleep Level] for a time greater than [Sleep Time].
- Speed Reference – The active speed command to the drive as selected by drive logic and [Speed Ref x Sel].
- Start Command - A command generated by pressing the Start button on the HIM, closing a digital input programmed for Start, Run, Run Forward or Run Reverse.

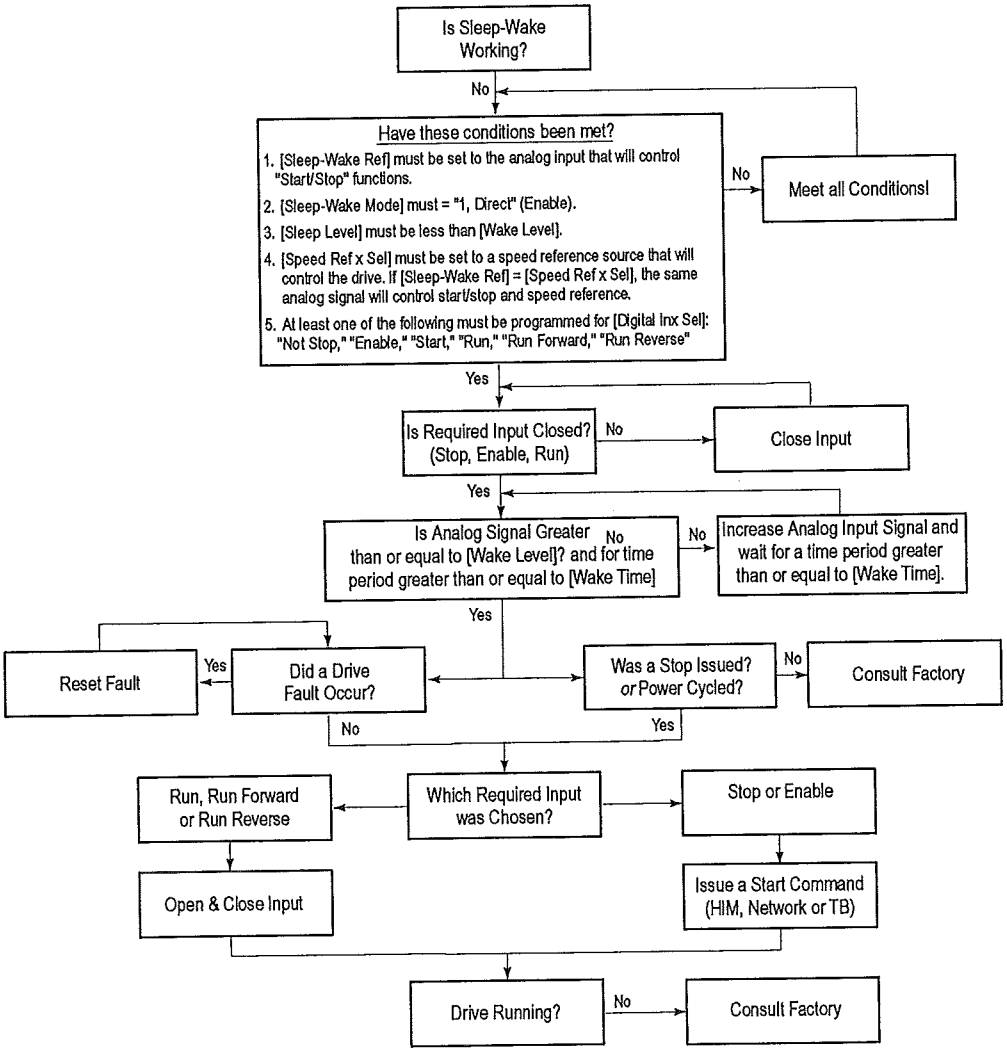

Start At PowerUp

Standard Control Option

When Start At Powerup in 2 wire control is configured, the drive will start if the start permissive conditions are met within 10 seconds of drive power being applied. An alarm will be annunciated from application of power until the drive actually starts, indicating the powerup start attempt is in progress. If the drive has not started within the 10 second interval, the powerup start attempt will be terminated.

Vector Control Option

A powerup delay time of up to 30 seconds can be programmed through [Powerup Delay], parameter 167. After the time expires, the drive will start if all of the start permissive conditions are met. Before that time, restart is not possible.

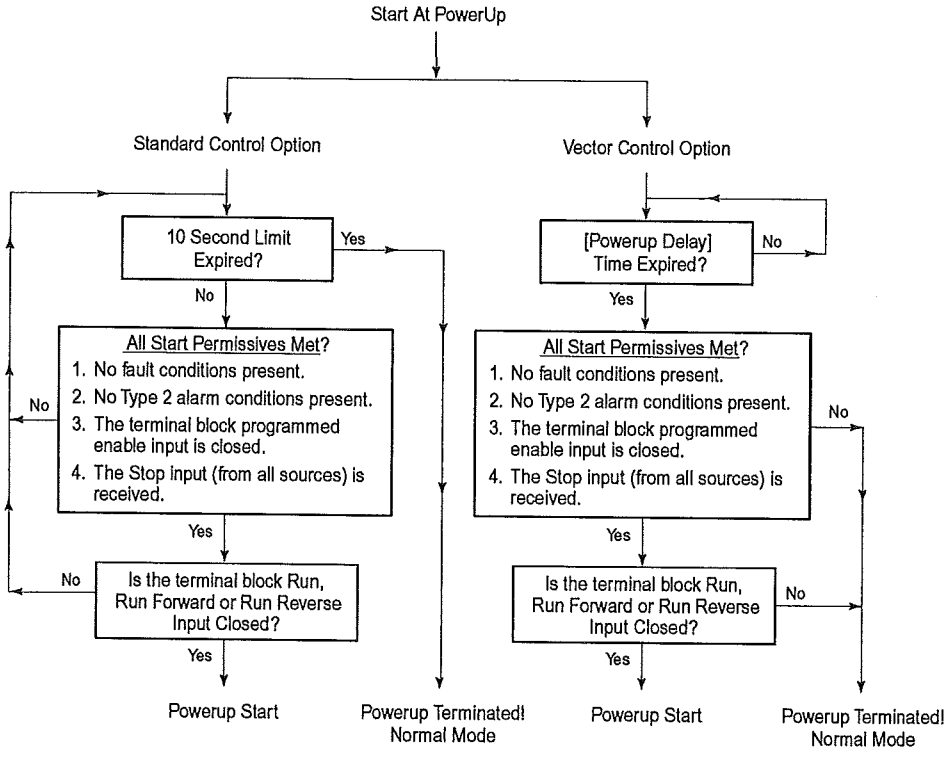

Stop Mode

Mode	Description
Coast to Stop	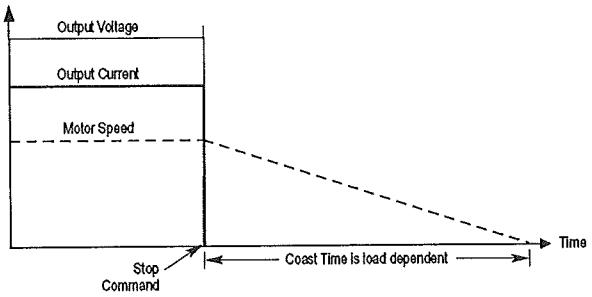 This method releases the motor and allows the load to stop by friction. 1. On Stop, the drive output goes immediately to zero (off). 2. No further power is supplied to the motor. The drive has released control. 3. The motor will coast for a time that is dependent on the mechanics of the system (inertia, friction, etc).
Brake to Stop	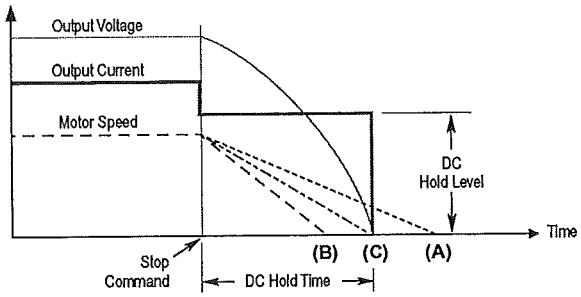 This method uses DC injection of the motor to Stop and/or hold the load. 1. On Stop, 3 phase drive output goes to zero (off) 2. Drive outputs DC voltage on the last used phase at the level programmed in [DC Brake Level] Par 158. This voltage causes a "stopping" brake torque. If the voltage is applied for a time that is longer than the actual possible stopping time, the remaining time will be used to attempt to hold the motor at zero speed. 3. DC voltage to the motor continues for the amount of time programmed in [DC Brake Time] Par 159. Braking ceases after this time expires. 4. After the DC Braking ceases, no further power is supplied to the motor. The motor may or may not be stopped. The drive has released control. 5. The motor, if rotating, will coast from its present speed for a time that is dependent on the mechanics of the system (inertia, friction, etc).

Mode	Description
Ramp to Stop	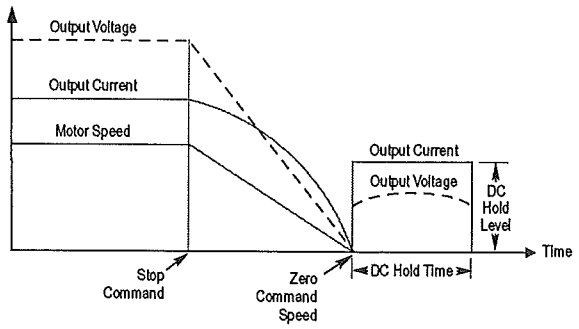 This method uses drive output reduction to stop the load. 1. On Stop, drive output will decrease according to the programmed pattern from its present value to zero. The pattern may be linear or squared. The output will decrease to zero at the rate determined by the programmed [Maximum Freq] and the programmed active [Decel Time x] 2. The reduction in output can be limited by other drive factors such as such as bus or current regulation. 3. When the output reaches zero the output is shut off. 4. The motor, if rotating, will coast from its present speed for a time that is dependent on the mechanics of the system (inertia, friction, etc).
Ramp to Hold	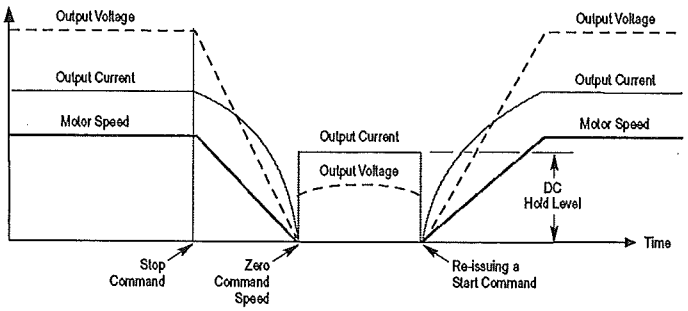 This method combines two of the methods above. It uses drive output reduction to stop the load and DC injection to hold the load at zero speed once it has stopped. 1. On Stop, drive output will decrease according to the programmed pattern from its present value to zero. The pattern may be linear or squared. The output will decrease to zero at the rate determined by the programmed [Maximum Freq] and the programmed active [Decel Time x] 2. The reduction in output can be limited by other drive factors such as bus or current regulation. 3. When the output reaches zero 3 phase drive output goes to zero (off) and the drive outputs DC voltage on the last used phase at the level programmed in [DC Brake Level] Par 158. This voltage causes a "holding" brake torque. 4. DC voltage to the motor continues until a Start command is reissued or the drive is disabled. 5. If a Start command is reissued, DC Braking ceases and he drive returns to normal AC operation. If an Enable command is removed, the drive enters a "not ready" state until the enable is restored.

Numerics

32 Bit Parameters, **3-2**

A

AC Input
Circuit Breakers, **A-6**
Ground, **1-3**
Line Fuses, **A-6**
AC Supply
Source, **1-2**
Unbalanced, **1-3**
Ungrounded, **1-3**
Accel Mask, **3-45**
Accel Owner, **3-45**
Accel Time x, **3-27**
Access Panel Removal, **1-7**
Agency Certification, **A-2**
Alarm & Fault Types, **4-1**
Alarm 1 @ Fault, **3-40**
Alarm 2 @ Fault, **3-40**
Alarm Clear, **3-42**
Alarm Config 1, **3-42**
Alarm Descriptions, **4-9**
Alarm x Code, **3-42**
Alarms
Analog In Loss, **4-9**
Bipolar Conflict, **4-9**
Decel Inhibt, **4-9**
Dig In Conflict, **4-9**
Drive OL Level, **4-10**
FluxAmpsRef Rang, **4-10**
IntDBRes OvrHeat, **4-10**
IR Volts Range, **4-10**
Ixo Vlt Rang, **4-10**
MaxFreq Conflict, **4-10**
Motor Type Cflct, **4-10**
NP Hz Conflict, **4-10**
Power Loss, **4-10**
Precharge Active, **4-10**
Sleep Config, **4-10**
Speed Ref Cflct, **4-10**
Start At PowerUp, **4-10**
UnderVoltage, **4-10**
VHz Neg Slope, **4-10**
Waking, **4-10**
Alarms Group, **3-42**
Alarms, Clearing, **4-9**
ALT Key
Functions, **B-2**
ALT Key Functions, **B-2**
Ambient Temperature, **1-2**
Analog In Loss Alarm, **4-9**
Analog In Loss Fault, **4-4**
Analog In x Hi, **3-47**
Analog In x Lo, **3-48**
Analog Inputs Group, **3-47**
Analog Inx Value, **3-11**
Analog Out1 Hi, **3-49**
Analog Out1 Lo, **3-49**
Analog Out1 Sel, **3-49**
Analog Out2 Lo, **3-49**
Analog Out2 Sel, **3-49**
Analog Outputs Group, **3-48**
Anlg Cal Chksum Fault, **4-4**
Anlg In Config, **3-47**
Anlg In Loss, **3-48**
Anlg In Sqr Root, **3-47**
Anlg Out Absolut, **3-48**
Anlg Out Config, **3-48**
Armored Cable, **1-6**
Assisted Start Up, **2-3**
Auto Mode, **1-22**
Auto Rstrt Delay, **3-31**
Auto Rstrt Tries, **3-31**
Auto Rstrt Tries Fault, **4-4**
Auto/Manual
Control, **1-23**
Modes, **1-22**
Auto-Reset/Start, **4-1**
Autotune, **3-15**
AutoTune Aborted Fault, **4-4**
Autotune Torque, **3-16**
Auxiliary Input Fault, **4-4**

B

Before Applying Power, **2-1**
Bipolar Conflict Alarm, **4-9**
Bipolar Inputs, **1-15**
Bottom Plate Removal, **1-7**
Bottom View Dimensions, **A-15**
Brake
Dynamic, **3-30**
Break Frequency, **3-17**
Break Voltage, **3-17**

Bus Capacitors, Discharging, **P-3**
Bus Reg Kd, **3-30**
Bus Reg Ki, **3-29**
Bus Reg Kp, **3-30**
Bus Reg Mode A, **3-30**
Bus Reg Mode B, **3-30**

C

Cable Entry Plate
  Removal, **1-7**
  SHLD Terminal, **1-4**
Cable Length
  Motor, **1-7**
Cable Trays, **1-7**
Cables, Power
  Armored, **1-6**
  Insulation, **1-5**
  Separation, **1-5**
  Shielded, **1-5**, **1-6**
  Type, **1-5**
  Unshielded, **1-5**
Capacitors
  Bus, Discharging, **P-3**
Cassette, I/O, **1-16**
Catalog Number Explanation, **P-4**
CE
  Conformity, **1-24**
  Requirements, **1-25**
Checklist, Start-Up, **2-1**
Circuit Breakers, Input, **1-5**
Clear Fault Owner, **3-46**
Clearing Alarms, **4-9**
Clearing Faults, **4-3**
Cntl Bd Overtemp Fault, **4-4**
Comm Control Group, **3-43**
Commanded Freq, **3-10**
Commanded Speed, **3-10**
Commanded Torque, **3-11**
Common Mode Capacitors, **1-13**
Common Mode Interference, **1-15**
Common Symptoms and Corrective Action, **4-11**
Communication File, **3-43**
Communications
  Logic Command Word, **A-4**
  Logic Status Word, **A-5**
  Programmable Controller Configuations, **A-3**
Compensation, **3-14**
Conduit, **1-7**
Contactors
  Input, **1-12**
  Output, **1-12**, **A-6**
Control Options, **3-3**
Control Status, **3-17**
Control SW Ver, **3-12**
Control Wire, **1-15**
Control, Auto/Manual, **1-23**
Conventions, Manual, **P-2**
Copycat, **B-4**
Cover, Opening, **1-1**
Cross Reference, Parameter
  by Name, **3-52**
  by Number, **3-55**
Current Lmt Gain, **3-28**
Current Lmt Sel, **3-28**
Current Lmt Val, **3-28**
Current Rate Limit, **3-28**

D

Data In Ax, **3-46**
Data Out Ax, **3-46**
Data, Saving, **B-4**
Datalinks Group, **3-46**
DB Resistance Fault, **4-4**
DB Resistor Type, **3-30**
DC Brake Level, **3-29**
DC Brake Time, **3-29**
DC Brk Levl Sel, **3-29**
DC Bus Memory, **3-11**
DC Bus Voltage, **3-11**
Decel Inhibit Fault, **4-4**
Decel Inhibt Alarm, **4-9**
Decel Mask, **3-45**
Decel Owner, **3-46**
Decel Time x, **3-27**
Diagnostic Data, Viewing, **B-4**
Diagnostics Group, **3-36**
Dig In Conflict Alarm, **4-9**
Dig In Status, **3-38**
Dig Out Status, **3-38**
Dig Outx Level, **3-51**
Dig Outx OffTime, **3-51**
Dig Outx OnTime, **3-51**
Digital Inputs Group, **3-50**
Digital Inx Sel, **3-50**
Digital Outputs Group, **3-50**
Digital Outx Sel, **3-51**

Dimensions
Bottom View, **A-15**
Drive, **A-11**
Minimum Clearances, **1-2**
Mounting
PowerFlex 700, **A-11**, **A-13**
Direction Config Group, **3-34**
Direction Mask, **3-44**
Direction Mode, **3-34**
Direction Owner, **3-45**
Discrete Speeds Group, **3-22**
Distribution Systems
Unbalanced, **1-3**
Ungrounded, **1-3**
DPI Baud Rate, **3-43**
DPI Data Rate, **3-43**
DPI Port 1-5 Fault, **4-7**
DPI Port Locations, **B-1**
DPI Port Sel, **3-44**
DPI Port Value, **3-44**
Drive Alarm 1, **3-36**
Drive Alarm 2, **3-36**, **3-37**
Drive Checksum, **3-36**
Drive Data Group, **3-11**
Drive Frame Size, **P-3**
Drive Grounding, **1-3**
Drive Logic Rslt, **3-43**
Drive Memory Group, **3-34**
Drive OL Count, **3-38**
Drive OL Level Alarm, **4-10**
Drive OL Mode, **3-28**
Drive Overload Fault, **4-4**
Drive Powerup Fault, **4-4**
Drive Ramp Rslt, **3-44**
Drive Ratings, **A-6**
Drive Ref Rslt, **3-44**
Drive Status 1, **3-36**
Drive Temp, **3-38**
DriveExecutive, **3-1**
DriveExplorer, **3-1**
Droop RPM @ FLA, **3-28**
Dynamic Brake
Resistor Selection, **3-30**
Setup, **3-30**
Dynamic Control File, **3-27**

E

Earthing, see *Grounding*
Editing Parameters, **3-1**
Elapsed MWH, **3-10**
Elapsed Run Time, **3-10**
EMC
Directive, **1-24**
Instructions, **1-24**
EMI/RFI Filter Grounding, RFI Filter, **1-4**
Enc Position Fdbk, **3-18**
Enclosure Rating, **1-2**
Encoder Loss Fault, **4-4**
Encoder PPR, **3-18**
Encoder Quad Err Fault, **4-4**
Encoder Speed, **3-18**
Encoder Terminal Block, **1-16**, **1-19**
Encoder Wiring, **1-19**
Encoder Z Chan, **3-18**
ESD, Static Discharge, **P-3**
Excessive Load Fault, **4-4**
External Brake Resistor, **C-1**

F

Fault & Alarm Types, **4-1**
Fault 1 Time, **3-41**
Fault Amps, **3-39**
Fault Bus Volts, **3-39**
Fault Clear, **3-41**
Fault Clear Mode, **3-41**
Fault Clr Mask, **3-45**
Fault Config x, **3-40**
Fault Descriptions, **4-4**
Fault Frequency, **3-39**
Fault Queue, **B-4**
Fault Speed, **3-39**
Fault x Code, **3-41**
Faults
Analog In Loss, **4-4**
Anlg Cal Chksum, **4-4**
Auto Rstrt Tries, **4-4**
AutoTune Aborted, **4-4**
Auxiliary Input, **4-4**
Cntl Bd Overtemp, **4-4**
DB Resistance, **4-4**
Decel Inhibit, **4-4**
DPI Port 1-5, **4-7**
Drive Overload, **4-4**
Drive Powerup, **4-4**
Encoder Loss, **4-4**
Encoder Quad Err, **4-4**
Excessive Load, **4-4**
Faults Cleared, **4-5**

Flt QueueCleared, **4-5**
FluxAmpsRef Rang, **4-5**
Ground Fault, **4-5**
Hardware Fault, **4-5**
Heatsink OvrTemp, **4-5**
HW OverCurrent, **4-5**
I/O Comm Loss, **4-5**
I/O Failure, **4-5**
I/O Mismatch, **4-5**
Incompat MCB-PB, **4-5**
IR Volts Range, **4-5**
IXo VoltageRange, **4-6**
Motor Overload, **4-6**
NVS I/O Checksum, **4-6**
NVS I/O Failure, **4-6**
OverSpeed Limit, **4-6**
OverVoltage, **4-6**
Parameter Chksum, **4-6**
Params Defaulted, **4-6**
Phase Short, **4-6**
Phase to Grnd, **4-6**
Port 1-5 DPI Loss, **4-7**
Power Loss, **4-7**
Power Unit, **4-7**
Pulse In Loss, **4-7**
Pwr Brd Chksum, **4-7**
Pwr Brd Chksum2, **4-7**
Replaced MCB-PB, **4-7**
Shear Pin, **4-7**
Software, **4-7**
SW OverCurrent, **4-8**
Trnsistr OvrTemp, **4-8**
UnderVoltage, **4-8**
UserSet Chksum, **4-8**
Faults Cleared Fault, **4-5**
Faults Group, **3-40**
Faults, Clearing, **4-3**
Fdbk Filter Sel, **3-18**
Feedback Select, **3-19**
FGP, **3-3**
File
Communication, **3-43**
Dynamic Control, **3-27**
Inputs & Outputs, **3-47**
Monitor, **3-10**
Motor Control, **3-12**
Speed Command, **3-19**
Utility, **3-34**
File-Group-Parameter, **3-3**
Filter, RFI, **1-4**
First Environment Installations, **1-25**
Flt QueueCleared Fault, **4-5**
Flux Braking, **3-30**
Flux Current, **3-10**
Flux Current Ref, **3-15**
Flux Up Mode, **3-14**
Flux Up Time, **3-14**
Flux Vector Control Option, **3-3**
FluxAmpsRef Rang Alarm, **4-10**
FluxAmpsRef Rang Fault, **4-5**
Flying Start En, **3-31**
Flying StartGain, **3-31**
Frame Designations, **A-6**
Frame Size, Drive, **P-3**
Functions, ALT Key, **B-2**
Fuses
Input, **1-5**
Ratings, **A-6**

G

General Precautions, **P-3**
Ground Fault, **4-5**
Grounding
Bus, **1-3**
Conductor, **1-3**
Filter, **1-4**
General, **1-3**
Impedance, **1-3**
Safety, PE, **1-4**
Shields, **1-4**
Group
Alarms, **3-42**
Analog Inputs, **3-47**
Analog Outputs, **3-48**
Comm Control, **3-43**
Datalinks, **3-46**
Diagnostics, **3-36**
Digital Inputs, **3-50**
Digital Outputs, **3-50**
Direction Config, **3-34**
Discrete Speeds, **3-22**
Drive Data, **3-11**
Drive Memory, **3-34**
Faults, **3-40**
HIM Ref Config, **3-34**
Load Limits, **3-28**
Masks & Owners, **3-44**
Metering, **3-10**
MOP Config, **3-34**
Motor Data, **3-12**
Power Loss, **3-33**
Process PI, **3-24**
Ramp Rates, **3-27**

Restart Modes, **3-31**
Scaled Blocks, **3-42**
Slip Comp, **3-23**
Spd Mode & Limits, **3-19**
Speed Feedback, **3-18**
Speed References, **3-21**
Speed Regulator, **3-26**
Speed Trim, **3-23**
Stop/Brake Modes, **3-29**
Torq Attributes, **3-13**
Volts per Hertz, **3-17**

H

Hardware Enable, **1-19**
Hardware Fault, **4-5**
Heatsink OvrTemp Fault, **4-5**
HIM Menu Structure, **B-4**
HIM Menus
Diagnostics, **B-4**
Memory Storage, **B-4**
Preferences, **B-4**
HIM Ref Config Group, **3-34**
HIM, Removing/Installing, **B-8**
HW OverCurrent Fault, **4-5**

I

I/O
Cassette, **1-16**
Standard, **1-15**
Terminal Block, **1-16**
I/O Comm Loss Fault, **4-5**
I/O Failure Fault, **4-5**
I/O Mismatch Fault, **4-5**
Incompat MCB-PB Fault, **4-5**
Inertia Autotune, **3-16**
Input Contactor
Start/Stop, **1-12**
Input Devices
Circuit Breakers, **1-5**
Contactors, **1-12**
Fuses, **1-5**
Input Fusing, **1-5**
Input Potentiometer, **1-20**
Input Power Conditioning, **1-3**
Inputs & Outputs File, **3-47**
Installation, **1-1**
IntDBRes OvrHeat Alarm, **4-10**
IR Voltage Drop, **3-15**
IR Volts Range Alarm, **4-10**
IR Volts Range Fault, **4-5**
Ixo Vlt Rang Alarm, **4-10**
Ixo Voltage Drop, **3-15**
IXo VoltageRange Fault, **4-6**

J

Jog Mask, **3-44**
Jog Owner, **3-45**
Jog Speed, **3-22**

K

Kf Speed Loop, **3-26**
Ki Speed Loop, **3-26**
Kp Speed Loop, **3-26**

L

Language, **3-35**
Last Stop Source, **3-38**
LCD HIM
Menus, **B-4**
LEDs, **4-2**
Linear List, **3-3**
Linking Parameters, **B-6**
Load Frm Usr Set, **3-2, 3-35**
Load Limits Group, **3-28**
Local Mask, **3-45**
Local Owner, **3-46**
Logic Command Word, **A-4**
Logic Mask, **3-44**
Logic Status Word, **A-5**
Low Voltage Directive, **1-24**

M

Man Ref Preload, **3-34**
Manual Conventions, **P-2**
Manual Mode, **1-22**
Manual/Auto Control, **1-23**
Marker Pulse, **3-18**
Masks & Owners Group, **3-44**
MaxFreq Conflict Alarm, **4-10**
Maximum Freq, **3-13**
Maximum Speed, **3-19**
Maximum Voltage, **3-13**
Menu Structure, HIM, **B-4**
Metering Group, **3-10**
Minimum Clearances, **1-2**

Minimum Speed, **3-19**, **C-1**
MOD LED, **4-2**
Modes, Auto/Manual, **1-22**
Monitor File, **3-10**
MOP Config Group, **3-34**
MOP Frequency, **3-11**
MOP Mask, **3-45**
MOP Owner, **3-46**
MOP Rate, **3-34**
MOP Reference, **3-11**
Motor Cable Lengths, **1-7**
Motor Cntl Sel, **3-13**
Motor Control File, **3-12**
Motor Control Technology, **C-2**
Motor Data Group, **3-12**
Motor Fdbk Type, **3-18**
Motor NP FLA, **3-12**
Motor NP Hertz, **3-12**
Motor NP Power, **3-12**
Motor NP RPM, **3-12**
Motor NP Volts, **3-12**
Motor OL Count, **3-39**
Motor OL Factor, **3-13**
Motor OL Hertz, **3-13**
Motor Overload, **C-4**
Motor Overload Fault, **4-6**
Motor Poles, **3-13**
Motor Type, **3-12**
Motor Type Cflct Alarm, **4-10**
Mounting
  Clearances, **1-2**
  Orientation, **1-2**
Mounting Dimensions, **A-11**
MOVs, **1-13**
Mtr NP Pwr Units, **3-13**
Mtr Tor Cur Ref, **3-17**

N

Neg Torque Limit, **3-17**
NET LED, **4-2**
Non-Resettable, **4-1**
Notch Filter Freq, **3-18**
Notch Filter K, **3-18**
NP Hz Conflict Alarm, **4-10**
NVS I/O Checksum Fault, **4-6**
NVS I/O Failure Fault, **4-6**

O

Opening the Cover, **1-1**
Operating Modes, **1-22**
Operating Temperature, **1-2**
Operator Interface, **B-5**
Output Contactor
  Start/Stop, **1-12**
Output Current, **3-10**
Output Devices
  Cable Terminators, **A-6**
  Common Mode Cores, **A-6**
  Contactors, **1-12**, **A-6**
Output Freq, **3-10**
Output Power, **3-10**
Output Powr Fctr, **3-10**
Output Voltage, **3-10**
Overspeed, **C-5**
Overspeed Limit, **3-20**
OverSpeed Limit Fault, **4-6**
OverVoltage Fault, **4-6**

P

Param Access Lvl, **3-34**
Parameter
  Changing/Editing, **B-5**
  Descriptions, **3-1**
  File-Group-Parameter Organization, **3-3**
  Linear List, **3-3**
  Viewing, **B-5**
Parameter Chksum Fault, **4-6**
Parameter Cross Reference
  by Name, **3-52**
  by Number, **3-55**
Parameter Linking, **B-6**
Parameter View
  Advanced
    Standard Control, **3-6**
    Vector Control, **3-8**
  Basic
    Standard Control, **3-4**
    Vector Control, **3-5**
Parameters
  Accel Mask, **3-45**
  Accel Owner, **3-45**
  Accel Time x, **3-27**
  Alarm 1 @ Fault, **3-40**
  Alarm 2 @ Fault, **3-40**
  Alarm Clear, **3-42**
  Alarm Config 1, **3-42**

Alarm x Code, **3-42**
Analog In x Hi, **3-47**
Analog In x Lo, **3-48**
Analog Inx Value, **3-11**
Analog Out1 Hi, **3-49**
Analog Out1 Lo, **3-49**
Analog Out1 Sel, **3-49**
Analog Out2 Hi, **3-49**
Analog Out2 Lo, **3-49**
Analog Out2 Sel, **3-49**
Anlg In Config, **3-47**
Anlg In Loss, **3-48**
Anlg In Sqr Root, **3-47**
Anlg Out Absolut, **3-48**
Anlg Out Config, **3-48**
Auto Rstrt Delay, **3-31**
Auto Rstrt Tries, **3-31**
Autotune, **3-15**
Autotune Torque, **3-16**
Break Frequency, **3-17**
Break Voltage, **3-17**
Bus Reg Kd, **3-30**
Bus Reg Ki, **3-29**
Bus Reg Kp, **3-30**
Bus Reg Mode A, **3-30**
Bus Reg Mode B, **3-30**
Clear Fault Owner, **3-46**
Commanded Freq, **3-10**
Commanded Speed, **3-10**
Commanded Torque, **3-11**
Compensation, **3-14**
Control Status, **3-17**
Control SW Ver, **3-12**
Current Lmt Gain, **3-28**
Current Lmt Sel, **3-28**
Current Lmt Val, **3-28**
Current Rate Limit, **3-28**
Data In Ax, **3-46**
Data Out Ax, **3-46**
DB Resistor Type, **3-30**
DC Brake Level, **3-29**
DC Brake Time, **3-29**
DC Brk Levl Sel, **3-29**
DC Bus Memory, **3-11**
DC Bus Voltage, **3-11**
Decel Mask, **3-45**
Decel Owner, **3-46**
Decel Time x, **3-27**
Dig In Status, **3-38**
Dig Out Status, **3-38**
Dig Outx Level, **3-51**
Dig Outx OffTime, **3-51**
Dig Outx OnTime, **3-51**
Digital Inx Sel, **3-50**
Digital Outx Sel, **3-51**
Direction Mask, **3-44**
Direction Mode, **3-34**
Direction Owner, **3-45**
DPI Baud Rate, **3-43**
DPI Data Rate, **3-43**
DPI Port Sel, **3-44**
DPI Port Value, **3-44**
Drive Alarm 1, **3-36**
Drive Alarm 2, **3-36, 3-37**
Drive Checksum, **3-36**
Drive Logic Rslt, **3-43**
Drive OL Count, **3-38**
Drive OL Mode, **3-28**
Drive Ramp Rslt, **3-44**
Drive Ref Rslt, **3-44**
Drive Status 1, **3-36**
Drive Temp, **3-38**
Droop RPM @ FLA, **3-28**
Elapsed MWH, **3-10**
Elapsed Run Time, **3-10**
Enc Position Fdbk, **3-18**
Encoder PPR, **3-18**
Encoder Speed, **3-18**
Encoder Z Chan, **3-18**
Fault 1 Time, **3-41**
Fault Amps, **3-39**
Fault Bus Volts, **3-39**
Fault Clear, **3-41**
Fault Clear Mode, **3-41**
Fault Clr Mask, **3-45**
Fault Config x, **3-40**
Fault Frequency, **3-39**
Fault Speed, **3-39**
Fault x Code, **3-41**
Fdbk Filter Sel, **3-18**
Feedback Select, **3-19**
Flux Braking, **3-30**
Flux Current, **3-10**
Flux Current Ref, **3-15**
Flux Up Mode, **3-14**
Flux Up Time, **3-14**
Flying Start En, **3-31**
Flying StartGain, **3-31**
Inertia Autotune, **3-16**
IR Voltage Drop, **3-15**
Ixo Voltage Drop, **3-15**
Jog Mask, **3-44**
Jog Owner, **3-45**
Jog Speed, **3-22**
Kf Speed Loop, **3-26**
Ki Speed Loop, **3-26**
Kp Speed Loop, **3-26**
Language, **3-35**

Last Stop Source, **3-38**
Load Frm Usr Set, **3-2, 3-35**
Local Mask, **3-45**
Local Owner, **3-46**
Logic Mask, **3-44**
Man Ref Preload, **3-34**
Marker Pulse, **3-18**
Maximum Freq, **3-13**
Maximum Speed, **3-19**
Maximum Voltage, **3-13**
Minimum Speed, **3-19**
MOP Frequency, **3-11**
MOP Mask, **3-45**
MOP Owner, **3-46**
MOP Rate, **3-34**
MOP Reference, **3-11**
Motor Cntl Sel, **3-13**
Motor Fdbk Type, **3-18**
Motor NP FLA, **3-12**
Motor NP Hertz, **3-12**
Motor NP Power, **3-12**
Motor NP RPM, **3-12**
Motor NP Volts, **3-12**
Motor OL Count, **3-39**
Motor OL Factor, **3-13**
Motor OL Hertz, **3-13**
Motor Poles, **3-13**
Motor Type, **3-12**
Mtr NP Pwr Units, **3-13**
Mtr Tor Cur Ref, **3-17**
Neg Torque Limit, **3-17**
Notch Filter Freq, **3-18**
Notch Filter K, **3-18**
Output Current, **3-10**
Output Freq, **3-10**
Output Power, **3-10**
Output Powr Fctr, **3-10**
Output Voltage, **3-10**
Overspeed Limit, **3-20**
Param Access Lvl, **3-34**
PI Configuration, **3-24**
PI Control, **3-24**
PI Error Meter, **3-25**
PI Fdback Meter, **3-25**
PI Feedback Hi, **3-26**
PI Feedback Lo, **3-26**
PI Feedback Sel, **3-24**
PI Integral Time, **3-25**
PI Lower Limit, **3-25**
PI Output Meter, **3-26**
PI Preload, **3-25**
PI Prop Gain, **3-25**
PI Ref Meter, **3-25**
PI Reference Hi, **3-26**
PI Reference Lo, **3-26**
PI Reference Sel, **3-24**
PI Setpoint, **3-24**
PI Status, **3-25**
PI Upper Limit, **3-25**
Pos Torque Limit, **3-17**
Power Loss Level, **3-33**
Power Loss Mode, **3-33**
Power Loss Time, **3-33**
Powerup Delay, **3-31**
PowerUp Marker, **3-41**
Preset Speed x, **3-22**
Pulse In Scale, **3-18**
Pulse Input Ref, **3-22**
PWM Frequency, **3-28**
Ramped Speed, **3-11**
Rated Amps, **3-12**
Rated kW, **3-11**
Rated Volts, **3-11**
Reference Mask, **3-44**
Reference Owner, **3-45**
Regen Power Limit, **3-28**
Reset Meters, **3-35**
Reset To Defalts, **3-35**
Rev Speed Limit, **3-21**
Run Boost, **3-17**
S Curve %, **3-27**
Save HIM Ref, **3-34**
Save MOP Ref, **3-34**
Save To User Set, **3-35**
Scale In Hi, **3-42**
Scale In Lo, **3-42**
Scale In Value, **3-42**
Scale Out Hi, **3-42**
Scale Out Lo, **3-43**
Scale Out Value, **3-43**
Skip Freq Band, **3-20**
Skip Frequency x, **3-20**
Sleep Level, **3-33**
Sleep Time, **3-33**
Sleep-Wake Mode, **3-32**
Sleep-Wake Ref, **3-32**
Slip Comp Gain, **3-23**
Slip RPM @ FLA, **3-23**
Slip RPM Meter, **3-23**
Speed Desired BW, **3-27**
Speed Feedback, **3-11**
Speed Mode, **3-19**
Speed Ref A Hi, **3-21**
Speed Ref A Lo, **3-21**
Speed Ref A Sel, **3-21**
Speed Ref B Hi, **3-21**
Speed Ref B Lo, **3-21**
Speed Ref B Sel, **3-21**

Speed Ref Source, **3-37**
Speed Reference, **3-11**
Speed Units, **3-19**
Speed/Torque Mod, **3-20**
Start At PowerUp, **3-31**
Start Inhibits, **3-37**
Start Mask, **3-44**
Start Owner, **3-45**
Start/Acc Boost, **3-17**
Status 1 @ Fault, **3-39**
Stop Mode x, **3-29**
Stop Owner, **3-45**
Stop/BRK Mode x, **3-29**
SV Boost Filter, **3-14**
TB Man Ref Hi, **3-22**
TB Man Ref Lo, **3-22**
TB Man Ref Sel, **3-22**
Testpoint 1 Sel, **3-40**
Testpoint x Data, **3-40**
Torq Ref A Div, **3-16**
Torque Current, **3-10**
Torque Perf Mode, **3-13**
Torque Ref B Mult, **3-2, 3-16**
Torque Ref x Hi, **3-16**
Torque Ref x Lo, **3-16**
Torque Ref x Sel, **3-16**
Torque Setpoint, **3-16**
Total Inertia, **3-27**
Trim Hi, **3-23**
Trim In Select, **3-23**
Trim Lo, **3-23**
Trim Out Select, **3-23**
Voltage Class, **3-35**
Wake Level, **3-33**
Wake Time, **3-33**
Params Defaulted Fault, **4-6**
PE Ground, **1-4**
Phase Short Fault, **4-6**
Phase to Grnd Fault, **4-6**
PI Configuration, **3-24**
PI Control, **3-24**
PI Error Meter, **3-25**
PI Fdback Meter, **3-25**
PI Feedback Hi, **3-26**
PI Feedback Lo, **3-26**
PI Feedback Sel, **3-24**
PI Integral Time, **3-25**
PI Lower Limit, **3-25**
PI Output Meter, **3-26**
PI Preload, **3-25**
PI Prop Gain, **3-25**
PI Ref Meter, **3-25**
PI Reference Hi, **3-26**
PI Reference Lo, **3-26**
PI Reference Sel, **3-24**
PI Setpoint, **3-24**
PI Status, **3-25**
PI Upper Limit, **3-25**
Port 1-5 DPI Loss Fault, **4-7**
PORT LED, **4-2**
Ports, DPI Type, **B-1**
Pos Torque Limit, **3-17**
Potentiometer, Wiring, **1-20**
Power Cables/Wiring, **1-5**
Power Conditioning, Input, **1-3**
Power Loss Alarm, **4-10**
Power Loss Fault, **4-7**
Power Loss Group, **3-33**
Power Loss Level, **3-33**
Power Loss Mode, **3-33**
Power Loss Ride Through, **C-6**
Power Loss Time, **3-33**
Power Terminal Block, **1-10**
Power Unit Fault, **4-7**
Power Wiring
Access Panel, **1-7**
General, **1-7**
PowerFlex 700 Reference Manual, **P-1**
Powering Up the Drive, **2-1**
Powerup Delay, **3-31**
PowerUp Marker, **3-41**
Precautions, General, **P-3**
Precharge Active Alarm, **4-10**
Preferences, Setting, **B-4**
Preset Speed x, **3-22**
Process PI
Standard Control, **C-7**
Process PI Group, **3-24**
Programmable Controller
Configuations, **A-3**
Programming, **3-1**
Publications, Reference, **P-2**
Pulse In Loss Fault, **4-7**
Pulse In Scale, **3-18**
Pulse Input Ref, **3-22**
PWM Frequency, **3-28**
Pwr Brd Chksum Fault, **4-7**
Pwr Brd Chksum2, **4-7**
PWR LED, **4-2**

R

Ramp Rates Group, **3-27**
Ramped Speed, **3-11**
Rated Amps, **3-12**
Rated kW, **3-11**
Rated Volts, **3-11**
Ratings, Drive, **A-6**
Reference Control, **1-22**
Reference Manual, **P-1**
Reference Mask, **3-44**
Reference Material, **P-2**
Reference Owner, **3-45**
Regen Power Limit, **3-28**
Removing Cover, **1-1**
Repeated Start/Stop, **1-12**
Replaced MCB-PB Fault, **4-7**
Reset Meters, **3-35**
Reset To Defalts, **3-35**
Reset to Defaults, HIM, **B-4**
Restart Modes Group, **3-31**
Rev Speed Limit, **3-21**
Reverse Speed Limit, **C-10**
Run Boost, **3-17**

S

S Curve %, **3-27**
S.M.A.R.T. Start Up, **2-3**
Safety Ground, **1-4**
Save HIM Ref, **3-34**
Save MOP Ref, **3-34**
Save To User Set, **3-35**
Saving Data, **B-4**
Scale In Hi, **3-42**
Scale In Lo, **3-42**
Scale In Value, **3-42**
Scale Out Hi, **3-42**
Scale Out Lo, **3-43**
Scale Out Value, **3-43**
Scaled Blocks Group, **3-42**
Setting Preferences, **B-4**
Shear Pin Fault, **4-7**
Shielded Cables
  Power, **1-6**
SHLD Terminal, **1-4**
Short Circuit Protection, **1-5**
Signal Wire, **1-15**
Skip Freq Band, **3-20**
Skip Frequency, **C-11**
Skip Frequency x, **3-20**
Sleep Config Alarm, **4-10**
Sleep Level, **3-33**
Sleep Time, **3-33**
Sleep Wake Mode, **C-13**
Sleep-Wake Mode, **3-32**
Sleep-Wake Ref, **3-32**
Slip Comp Gain, **3-23**
Slip Comp Group, **3-23**
Slip RPM @ FLA, **3-23**
Slip RPM Meter, **3-23**
Software Fault, **4-7**
Spd Mode & Limits Group, **3-19**
Specifications
  Agency Certification, **A-2**
  Control, **A-2**
  Drive Ratings, **A-6**
  Electrical, **A-2**
  Encoder, **A-3**
  Environment, **A-1**
  Protection, **A-1**
Speed Command File, **3-19**
Speed Command Sources, **1-22**
Speed Desired BW, **3-27**
Speed Feedback, **3-11**
Speed Feedback Group, **3-18**
Speed Mode, **3-19**
Speed Pot, **1-20**
Speed Ref A Hi, **3-21**
Speed Ref A Lo, **3-21**
Speed Ref A Sel, **3-21**
Speed Ref B Hi, **3-21**
Speed Ref B Lo, **3-21**
Speed Ref B Sel, **3-21**
Speed Ref Cflct Alarm, **4-10**
Speed Ref Source, **3-37**
Speed Reference, **3-11**
Speed Reference Control, **1-22**
Speed Reference Selection, **1-22**
Speed References Group, **3-21**
Speed Regulator Group, **3-26**
Speed Trim Group, **3-23**
Speed Units, **3-19**
Speed/Torque Mod, **3-20**
Standard Control I/O Terminal Block, **1-17**
Standard Control Option, **3-3**
Standard I/O
  TB, **1-16**
  Wiring, **1-15**

Start At PowerUp, **3-31**, **C-14**
Start At PowerUp Alarm, **4-10**
Start Inhibits, **3-37**
Start Mask, **3-44**
Start Owner, **3-45**
Start/Acc Boost, **3-17**
Start/Stop, Repeated, **1-12**
Start-Up
  Assisted, **2-3**
  Checklist, **2-1**
  S.M.A.R.T., **2-3**
Static Discharge, ESD, **P-3**
Status 1 @ Fault, **3-39**
Status LEDs, **4-2**
Stop Mode x, **3-29**
Stop Owner, **3-45**
Stop/Brake Modes Group, **3-29**
Stop/BRK Mode x, **3-29**
STS LED, **4-2**
Supply Source, **1-2**
SV Boost Filter, **3-14**
SW OverCurrent Fault, **4-8**
System Grounding, **1-3**

T

TB Man Ref Hi, **3-22**
TB Man Ref Lo, **3-22**
TB Man Ref Sel, **3-22**
Terminal Block
  Encoder, **1-16**, **1-19**
  Power, **1-10**
  Standard Control I/O, **1-17**
  Standard I/O, **1-16**
  Vector Control I/O, **1-18**
  Wire Size
    Encoder, **1-16**
    I/O, **1-16**
    Power, **1-9**
Testpoint 1 Sel, **3-40**
Testpoint Codes and Functions, **4-13**
Testpoint x Data, **3-40**
Torq Attributes Group, **3-13**
Torq Ref A Div, **3-16**
Torque Current, **3-10**
Torque Perf Mode, **3-13**
Torque Ref B Mult, **3-2**, **3-16**
Torque Ref x Hi, **3-16**
Torque Ref x Lo, **3-16**
Torque Ref x Sel, **3-16**
Torque Reference Source, **1-22**
Torque Setpoint, **3-16**
Total Inertia, **3-27**
Trim Hi, **3-23**
Trim In Select, **3-23**
Trim Lo, **3-23**
Trim Out Select, **3-23**
Trnsistr OvrTemp Fault, **4-8**
Troubleshooting, **4-1**

U

Unbalanced/Ungrounded Supply, **1-3**
UnderVoltage
  Alarm, **4-10**
  Fault, **4-8**
Ungrounded Distribution Systems, **1-13**
Unshielded Power Cables, **1-5**
User Configurable Alarm, **4-1**
User Sets, **B-4**
UserSet Chksum Fault, **4-8**
Utility File, **3-34**

V

Vector Control I/O Terminal Block, **1-18**
VHz Neg Slope Alarm, **4-10**
Viewing and Changing Parameters, **B-5**
Voltage Class, **3-35**
Volts per Hertz Group, **3-17**

W

Wake Level, **3-33**
Wake Time, **3-33**
Waking Alarm, **4-10**
Web Sites, see *WWW, World Wide Web*
Wire
  Control, **1-15**
  Signal, **1-15**
Wiring, **1-1**
  Access Panel Removal, **1-7**
  Cable Entry Plate Removal, **1-7**
  Encoder, **1-19**
  Hardware Enable, **1-19**
  I/O, **1-15**
  Potentiometer, **1-20**
  Power, **1-5**
WWW, World Wide Web, **1-1**, **1-2**, **P-1**, **P-2**, **Back-2**

Notes:

Notes:

www.rockwellautomation.com

Corporate Headquarters
Rockwell Automation, 777 East Wisconsin Avenue, Suite 1400, Milwaukee, WI, 53202-5302 USA, Tel: (1) 414.212.5200, Fax: (1) 414.212.5201

Headquarters for Allen-Bradley Products, Rockwell Software Products and Global Manufacturing Solutions
Americas: Rockwell Automation, 1201 South Second Street, Milwaukee, WI 53204-2496 USA, Tel: (1) 414.382.2000, Fax: (1) 414.382.4444
Europe/Middle East/Africa: Rockwell Automation SA/NV, Vorstlaan/Boulevard du Souverain 36, 1170 Brussels, Belgium, Tel: (32) 2 663 0600, Fax: (32) 2 663 0640
Asia Pacific: Rockwell Automation, 27/F Citicorp Centre, 18 Whitfield Road, Causeway Bay, Hong Kong, Tel: (852) 2887 4788, Fax: (852) 2508 1846

Headquarters for Dodge and Reliance Electric Products
Americas: Rockwell Automation, 6040 Ponders Court, Greenville, SC 29615-4617 USA, Tel: (1) 864.297.4800, Fax: (1) 864.281.2433
Europe/Middle East/Africa: Rockwell Automation, Brühlstraße 22, D-74834 Elztal-Dallau, Germany, Tel: (49) 6261 9410, Fax: (49) 6261 17741
Asia Pacific: Rockwell Automation, 55 Newton Road, #11-01/02 Revenue House, Singapore 307987, Tel: (65) 6356-9077, Fax: (65) 6356-9011

U.S. Allen-Bradley Drives Technical Support
Tel: (1) 262.512.8176, Fax: (1) 262.512.2222, Email: support@drives.ra.rockwell.com, Online: www.ab.com/support/abdrives

Publication 20B-UM001C-EN-P – January, 2003 P/N 195670-P03
Supersedes 20B-UM001B-EN-P (9/02), 20B-DU003C-EN-P (1/03)

Copyright © 2003 Rockwell Automation, Inc. All rights reserved. Printed in USA.